Magnum Shower Mixer Trim

Gun Metal

Product Image



Product Details

Code:	**1097590B**
Brand:	Villeroy & Boch
Range:	Magnum
Warranty:	15 Years*
WELS:	*N/A*

Additional Features

Required Product
ColourChoice 7413300

Recommended Products

Additional Notes
- 35mm Ceramic Cartridge
- Compact 70mm Plate

Installation Instructions
* NOT COMPATABLE WITH UNIVERSAL BODY
* ONLY USE COLOURCHOICE BODY 7413300

Technical Specification

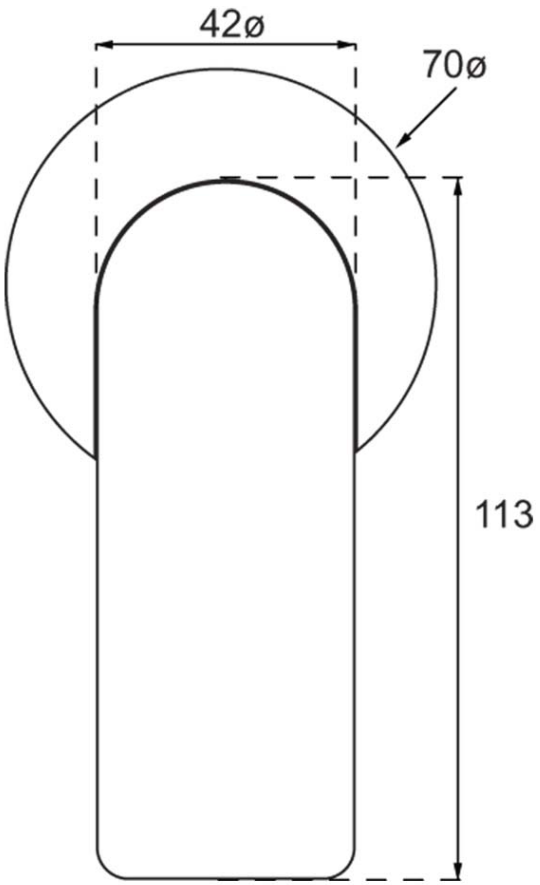

*Please visit **argentaust.com.au/warranty** to view the full warranty

Note: All dimensions are in millimetres and are subject to normal manufacturing variations. Always use the physical product measurements for cut-outs and rough-ins as the technical details shown may differ from the actual product. Use acetic cured silicone sealant. Do not use epoxy type adhesives. Clean with damp cloth. Do not use abrasive cleaners, liquids or pastes.