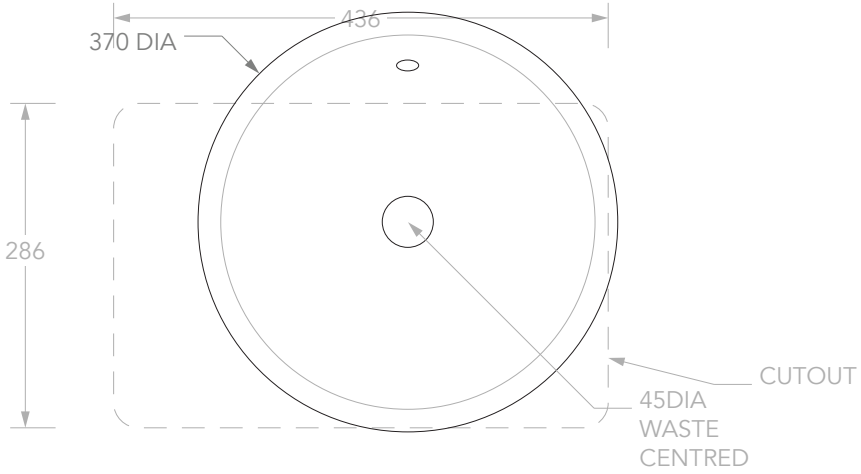

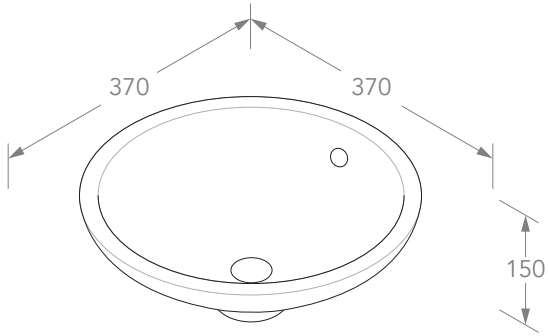

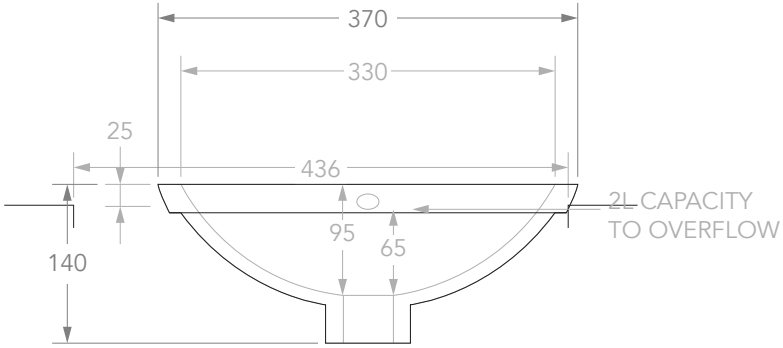

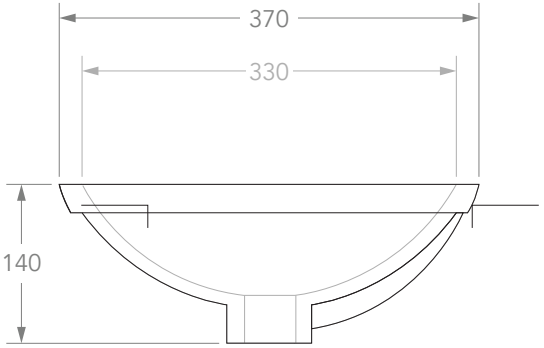

Adp

PRODUCT	ROUND	MATERIAL	CERAMIC
CODE	BT016	COLOUR	WHITE
STYLE	UNDER-COUNTER	FINISH	GLOSS
DIMENSIONS	370DIA X 150H		
CAPACITY	2L TO OVERFLOW		
VERSION 3	DATE 24/04/2020		

NOTES:
DUE TO THE MANUFACTURING NATURE OF CERAMICS, +/-5MM VARIATION IN SIZE AND DETAIL CAN BE EXPECTED.
DO NOT DRILL OR ROUGH IN UNTIL YOU HAVE RECEIVED AND MEASURED YOUR PRODUCT.
BASIN SUITS 32MM WASTE. ADP UNIVERSAL PLUG AND WASTE RECOMMENDED (SOLD SEPARATELY).
BASIN CUT-OUT IS 300 DIA CIRCLE.
ALL DIMENSIONS ARE IN MILLIMETRES. DO NOT MEASURE FROM DRAWING.