SPEC sheet

Curv 1200 Vanity

Bathroom Cabinets

Product Code	IL-PCK-CUR-12XX	
Vanity Top	10mm Porcelain Calacutta White	
Basin	Curv Matte White Basin	
Tap Holes	Centred 12 O'Clock 1 Tap Hole	
Size （(mm)）	1200W x 460D x 460H	
Colours available	IL-PCK-CUR-12MW	Matte White
	IL-PCK-CUR-12OK	Oak

Vanity description :

Curv 1200 Wall Hung Vanity in Oak with 10mm Porcelain Calacutta White and Curv Matte White Above Counter Basin - 1 Tap Hole

Colours:

Matte White
IL-PCK-CUR-12MW

Oak
IL-PCK-CUR-12OK

Size:

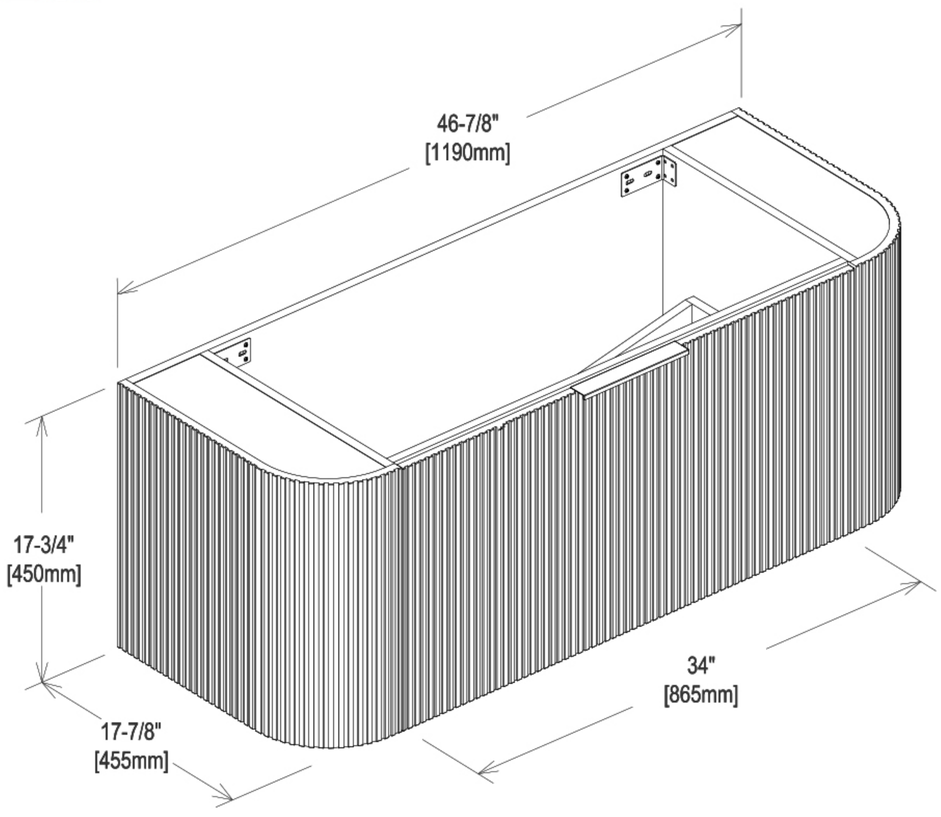

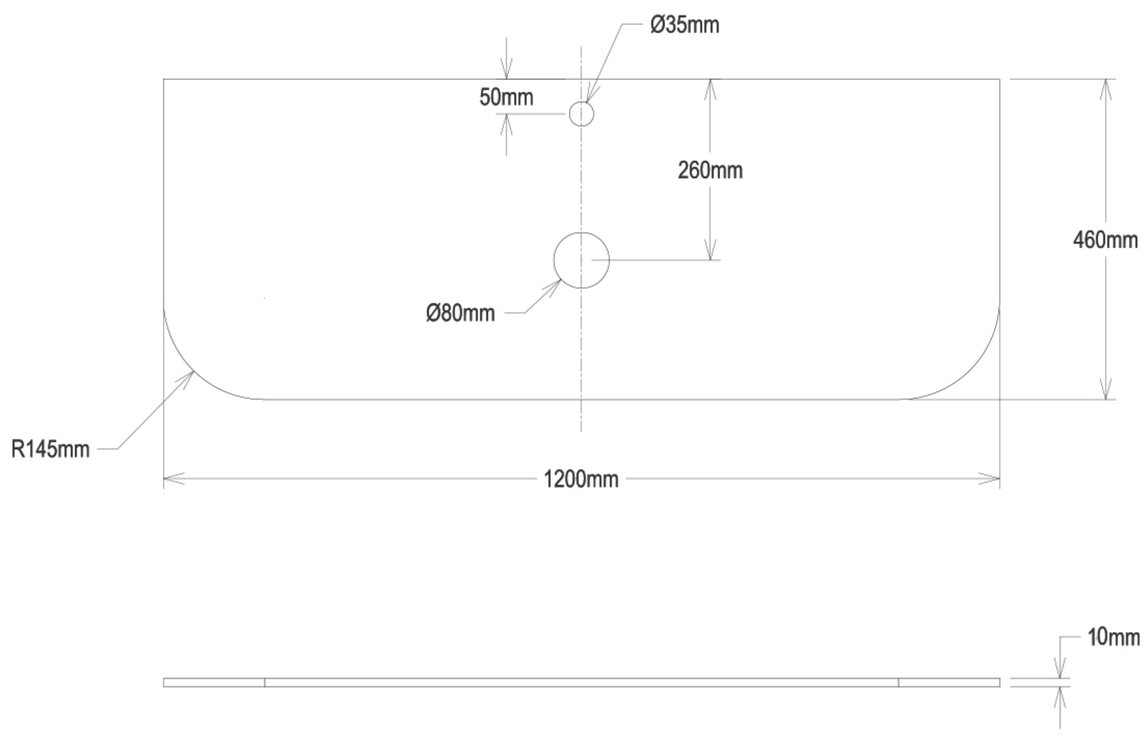

All dimensions are approximate and subject to normal variation. Although every effort is made not to change the above product specifications, ILUME reserve the right to do so without prior notification if necessary. Full information on guarantees available upon request.