Product Specs

(Units:mm)

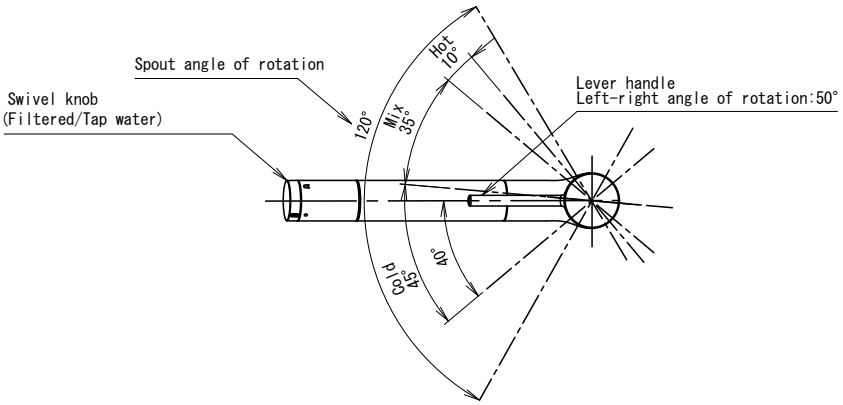

T-5

WELS Registration Number: T39504
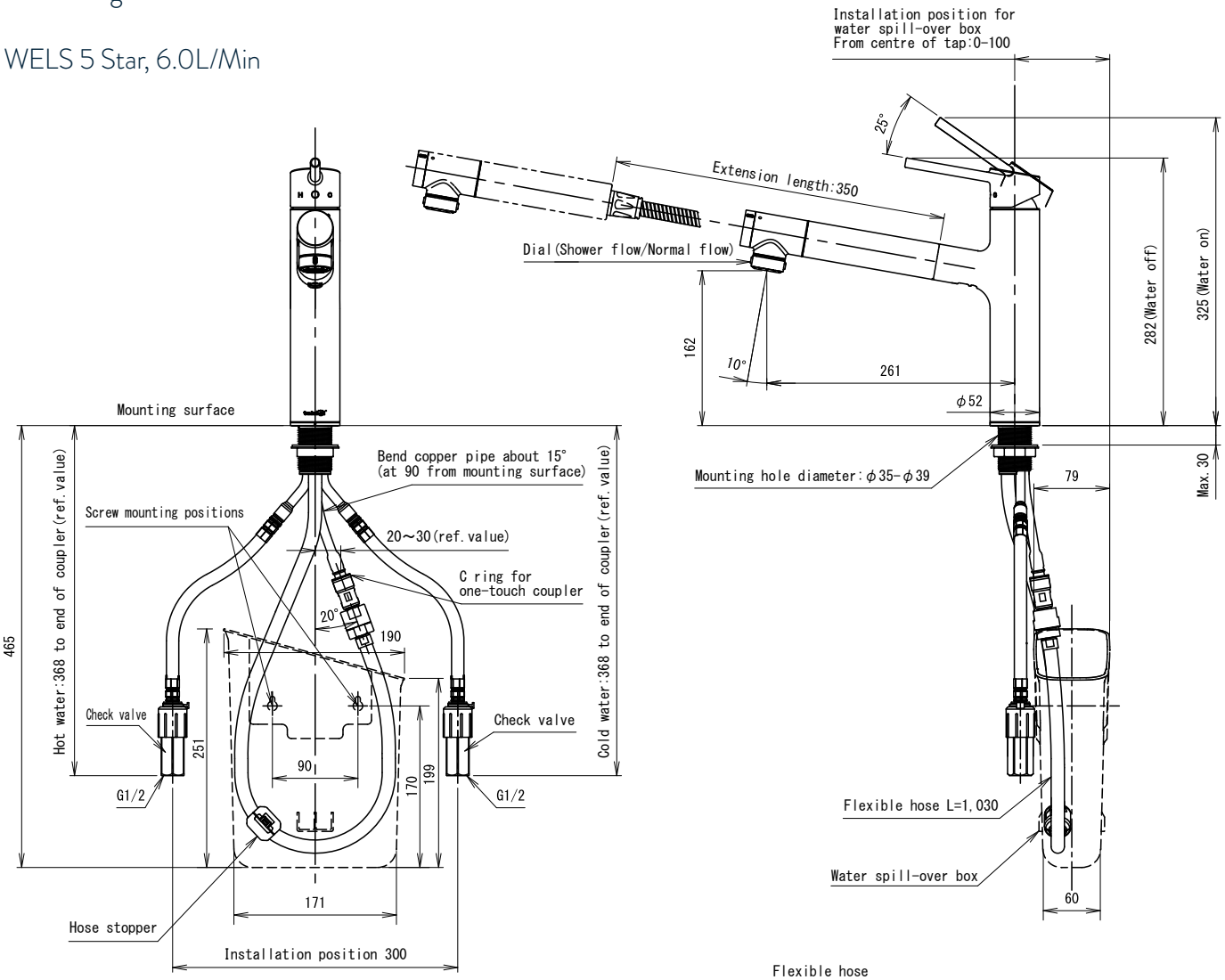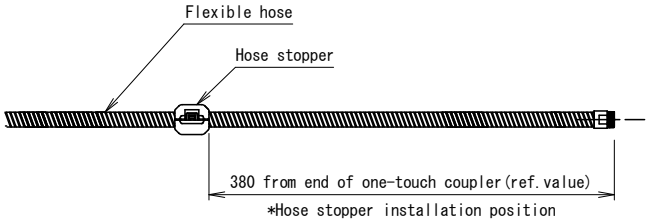
WELS 5 Star, 6.0L/Min