NOSTALGIA

NOSTALGIA TOILET ROLL HOLDER

SPECIFICATIONS

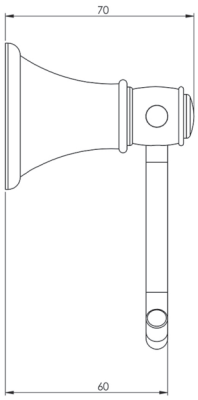

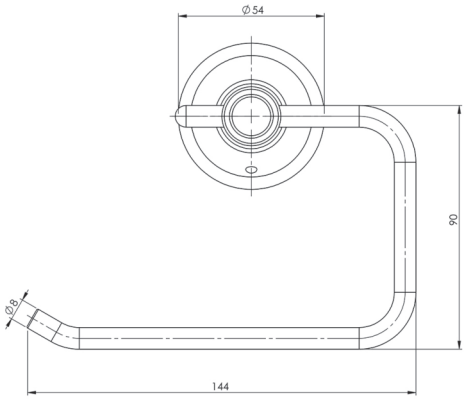

AVAILABLE IN

NS892 CHR
Chrome

NS892-40
Brushed Nickel

NS892-33
Antique Black

INFORMATION

MAINTENANCE AND CARE:

— All surfaces should be cleaned with mild liquid detergent or soap and water.
— Do not use cream cleaners or citrus based cleaning products, as they are abrasive.
— Use of unsuitable cleaning agents may damage the surface.
— Any damage caused in this way will not be covered by warranty.

Please visit https://www.phoenixtapware.com.au/warranty to view the full warranty