St George

ST-CON-1000M-MB

Basin Mixer - Concord
Matt Black

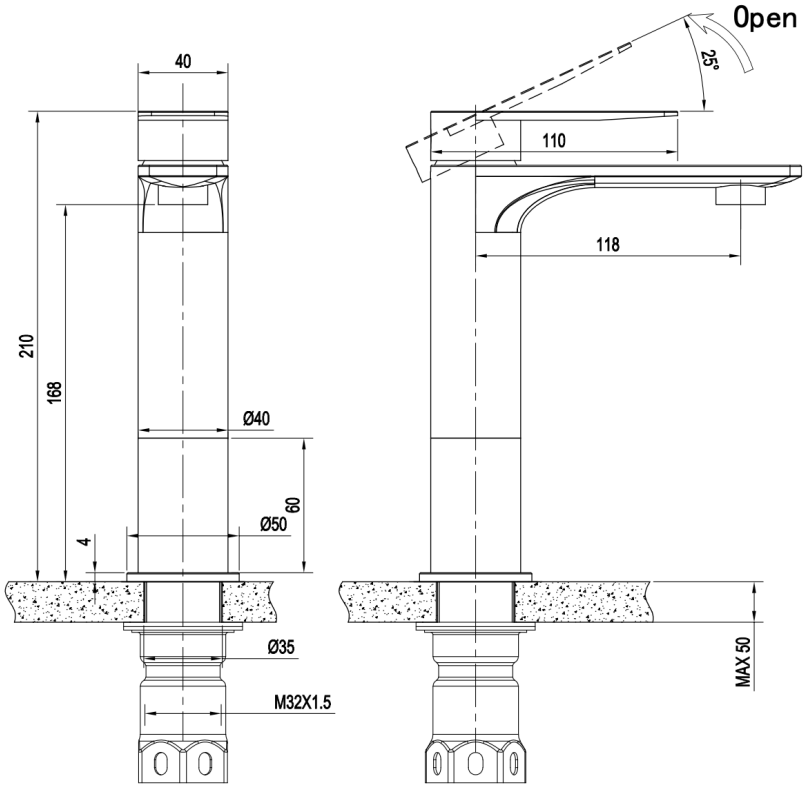

Specifications

Materials	304 Grade Stainless Steel
Cartridge	Kerox - Ceramic disc cartridge
Cartridge size	35mm
Working Pressures	150kPa - 500 Kpa
Operating Temperature	1°C - 65°C
Reg Number	T44738
WELS rating	5 Star 5.0L/Min
Warranty	Lifetime Warranty on Cartridge* 1 year parts and labour*

Stainless Steel 304 Stainless Steel

LEAD FREE

*Terms & Conditions Applied
*Excludes scratching & any other general surface finish deterioration from normal use