St George

## ST-CON-2000-CO

Shower Mixer - Concord
Copper

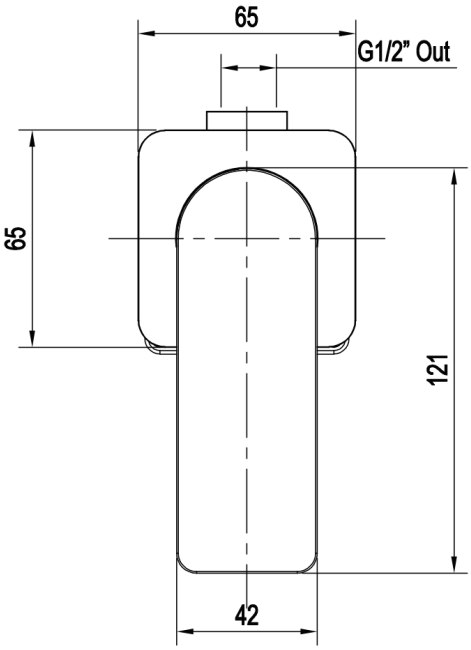


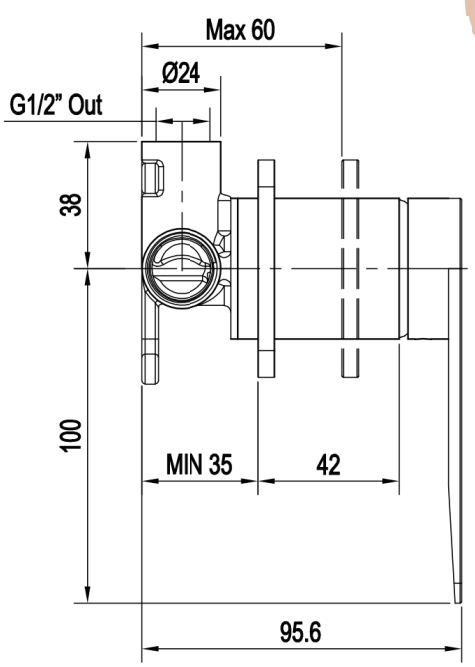


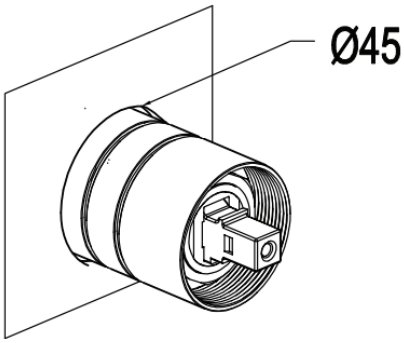


## Specifications

| | |
|---|---|
| Materials | 304 Grade Stainless Steel |
| Cartridge | Kerox - Ceramic disc cartridge |
| Cartridge size | 35mm |
| Working Pressures | 150kPa - 500 Kpa |
| Operating Temperature | 1°C - 65°C |
| Warranty | Lifetime Warranty on Cartridge*<br>1 year parts and labour* |

Stainless Steel 304 Stainless Steel

LEAD FREE

*Terms & Conditions Applied
*Excludes scratching & any other general surface finish deterioration from normal use