Villeroy & Boch 1748

ColourChoice Diverter Mixer Body

Product Image

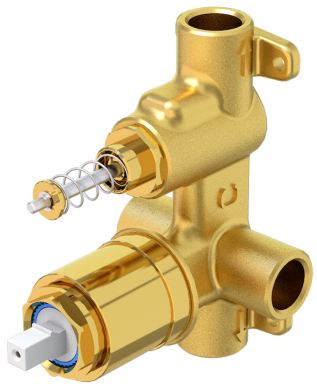

Product Details

Code:	**TVT0055161**
Brand:	Villeroy & Boch
Range:	ColourChoice
Warranty:	15 Years*
WELS:	*N/A*

Additional Features

Required Product

Recommended Products

Additional Notes

- One Body For All Colours & Designs
- Choose Colour & Design In Final Stage of Building/Renovation
- 4 Screw Fixing for Accurate Installation
- Compact Body

*Please visit **argentaust.com.au/warranty** to view the full warranty

Technical Specification

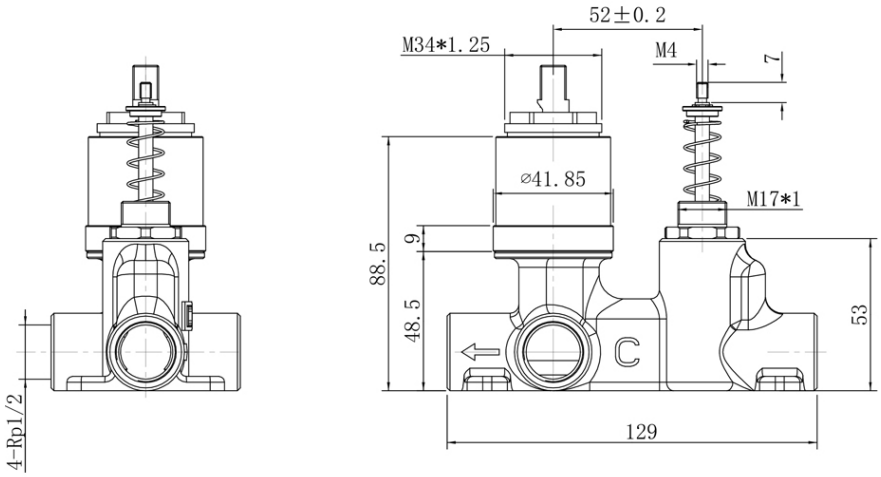

Note: All dimensions are in millimetres and are subject to normal manufacturing variations. Always use the physical product measurements for cut-outs and rough-ins as the technical details shown may differ from the actual product. Use acetic cured silicone sealant. Do not use epoxy type adhesives. Clean with damp cloth. Do not use abrasive cleaners, liquids or pastes.