SANCERAMICA™

ELEMENT

STYLE
Under counter

COLOURS
Glossy White / Matt White

OVERFLOW & WASTE
with overflow

waste not included.

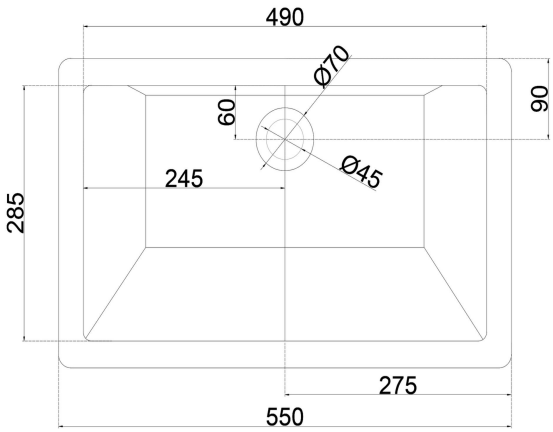

▲ vertical view

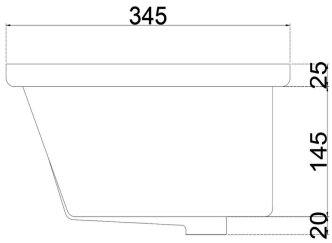

▲ side view

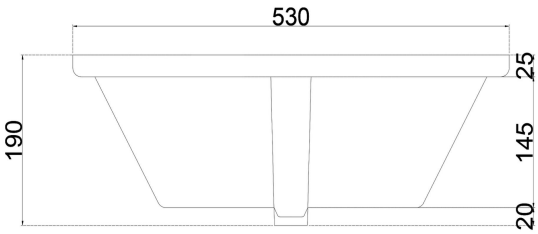

▲ front view

Units : MM

Note: All dimensions are in millimeters and are subject to normal manufacturing variations (-/+).
Due to continuing improvement in design and performance of the products, we reserve to vary specifications without notice.