SPHERE 600

S60

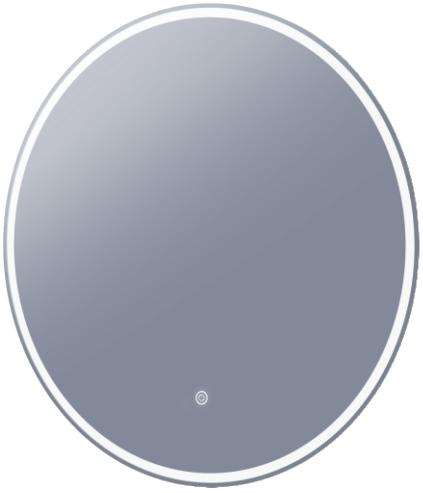

Size (mm):	
Diameter	600
Depth	35

Features	
LED Lighting	✓
Copper Free Mirror	✓

Optional Extra: Aluminium Coloured Frames		
Matt Black	S60-MB	●
Gun Metal	S60-GM	●
Brushed Nickel	S60-BN	●
Rose Gold	S60-RG	●
Brushed Brass	S60-BB	●

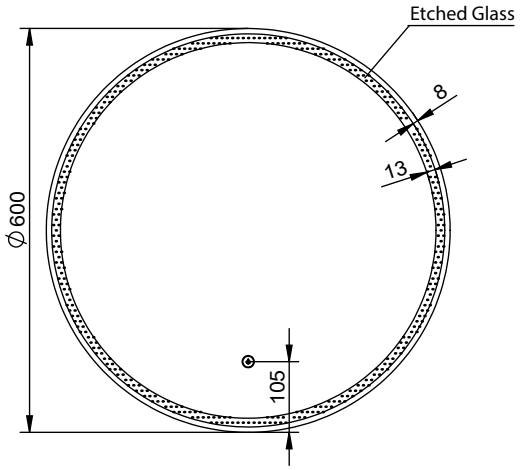

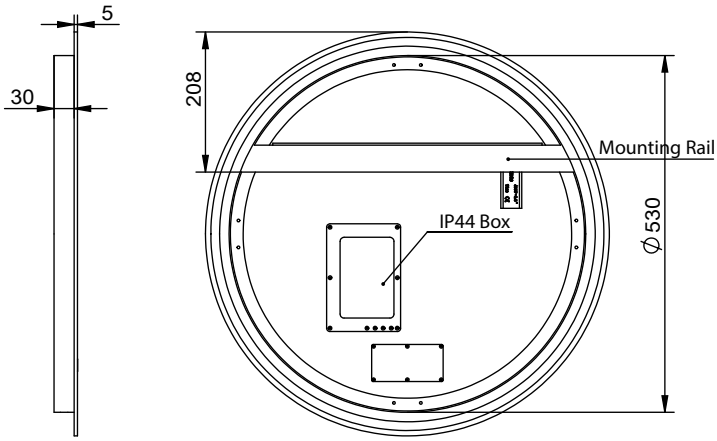

Please note: Must be installed by a licensed electrician in accordance with local regulations.

WARRANTY
5 years

*Conditions apply

To clean this mirror, wipe it with a soft microfiber cloth or a lint free cloth that has been rinsed in warm water and wrung out well, then rub the mirror gently with a soft dry cloth.

PLEASE do not use glass or window cleaner, or other cleaners with chemical agents. These may damage the silver coating and brown marks can result.

Please confirm all particulars with your sales consultant or refer to our website for more information prior to purchase.

www.remer.com.au | 03 9706 6663

Version 1.1 Novemeber 2019