PREZZO

RIMLESS BACK TO WALL TOILET SUITE - *Premium Vitreous China, High Gloss White/Chrome Dual Flush Buttons*

The Prezzo rimless back-to-wall toilet suite has the latest in innovative, hygiene technology in a modern streamline design. Designed to sit flush against the wall it saves space & makes cleaning easier. Exclusively designed for our trade customers.

☑ Soft close, quick release seat/lid ☑ Hygenic rimless toilet bowl ☑ Cyclone Flush

SIZE (p) x (w) x (h) mm	WATERMARK	WELS 4 STAR	CODE
620 x 380 x 780	AS1172	4.5/3L (3.4L avg. flush)	**PRTSWFR**

- **10 YEAR WARRANTY**
  - CISTERN & PAN
- **1 YEAR WARRANTY**
  - SEAT/LID & VALVES
- Universal setout 55-155mm*
- Round chrome dual flush buttons
- Top & bottom inlet cistern
- Top Inlet LH side only (facing WC)
- Bottom Inlet access LH & RH side
- Heavy duty seat & lid

CYCLONE FLUSH™

PREZZO ACCESSORIES	**OPTIONAL**
*Decina Universal Adjustable 150-250mm Pan Connector	**DEPCU**

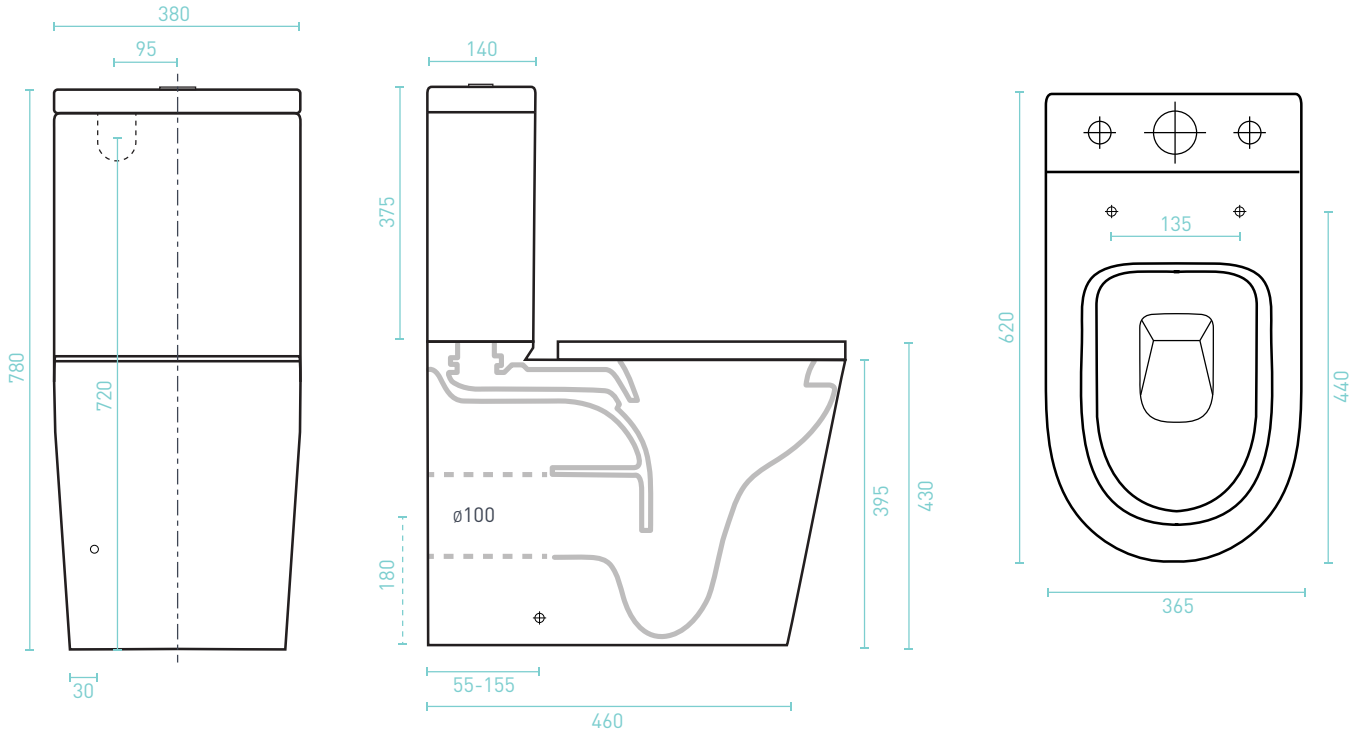

DECINA
DISCOVER INDULGENCE

*Warranty T&Cs apply, visit decina.com.au Decina reserves the right to change specifications without notice. Due to manufacturing tolerances dimensions may vary +/- 5mm.
We recommend installation does not start until after delivery. Please confirm all particulars prior to purchase, call 1300 DECINA or visit decina.com.au