BRAVAT
BY DIETSCHE 1873

Arc
AR-1000H

Ecotap Technology:
Unique flow adjustment technology ensures comfortable bathing experience and energy saving.

Water Saving Technology:
The selection of Swiss Neoperl quality water-saving aerator enables water clean and soft, and effectively save up to 30% water.

Air Mix Technology:
Over 2L air is absorbed every minute to mix with water fully so as to offer you the soft and rhythmed bathing experience.

Mirror-sided Plating Technology:
The mirror-sided plating technology that we are proud of makes our products even more extraordinaty.

High Basin Mixer

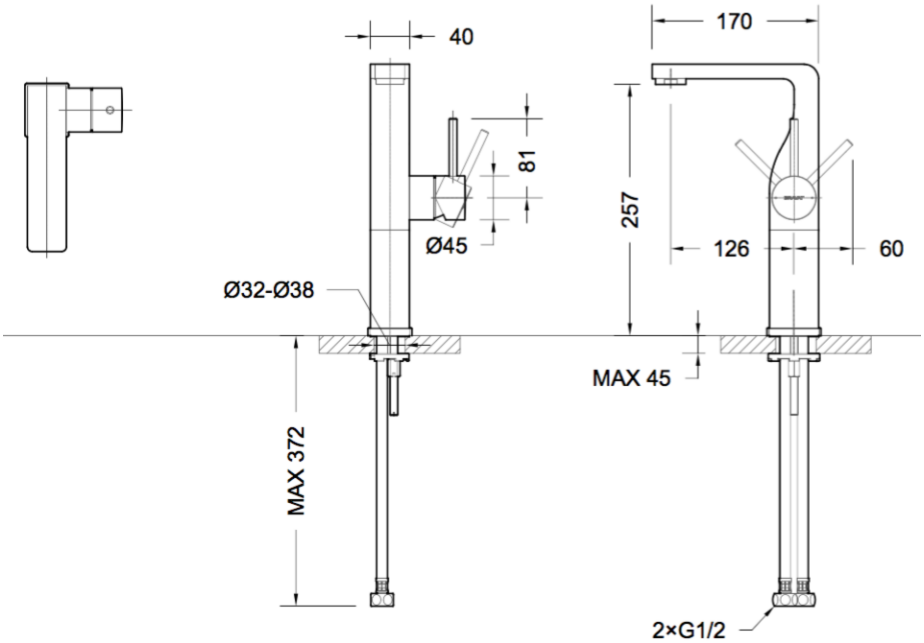

BRAVAT AUSTRALIA **1300 877 476** I info@bravataustralia.com.au