Harvey Norman®

Online | Mobile | Your Local Store

SHOP *with* CONFIDENCE on Quality, Value and Service.

Call 1300 464 278 for your local store.

Bathroom & Tiles available at the following locations: • **HARVEY NORMAN FLAGSHIP STORE @ AUBURN** 9202 4888 • **BALGOWLAH SUPERSTORE** 9949 0100 • **CAMPBELLTOWN SUPERSTORE** 4621 5200 • **CARINGBAH HOMEMAKER CENTRE** 9589 8800 • **CASTLE HILL** 9840 8800 • **GORDON** 9496 9200 • **LIVERPOOL** 9600 3333 • **MASCOT** 9693 0710 • **PENRITH SUPERSTORE** 4737 5111 • **PUNCHBOWL** 9784 4400 • **BENNETTS GREEN** 4944 5000 • **ERINA** 4365 9888 • **WARRAWONG** 4223 8800 • **FYSHWICK** 6283 1200

Harvey Norman® stores are operated by independent franchisees.

Metro 900

900 x 500 x 500

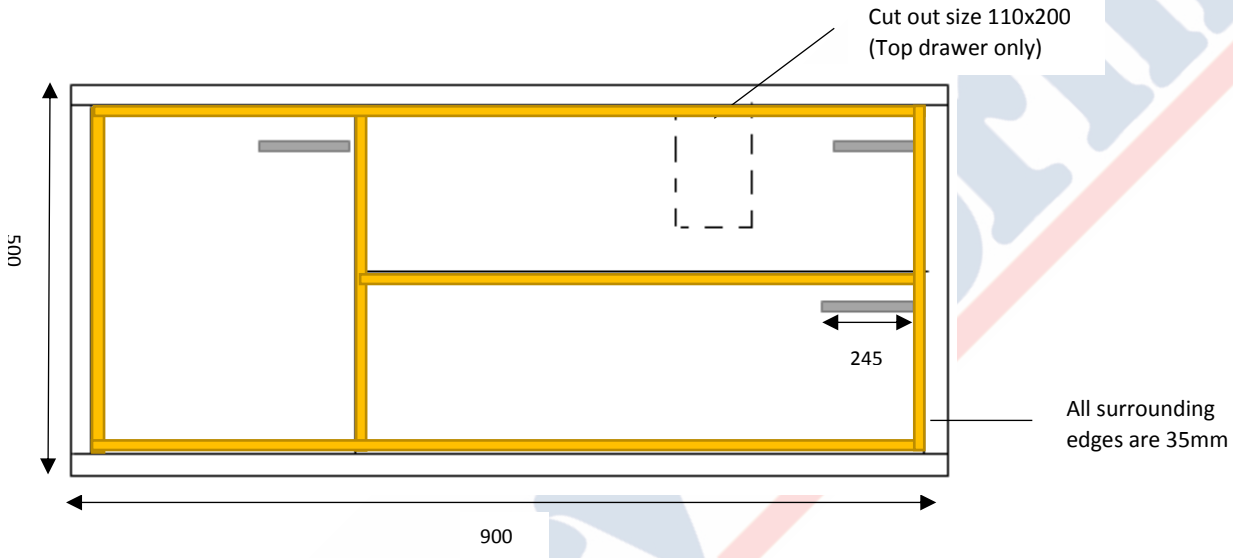

- Depth of door is 18mm
- Depth of drawer is 335mm
- Yellow lines indicate 5mm between surrounding edge and door/drawer
- 5mm gap between two drawers
- 290 inside of door from left wall to divider wall

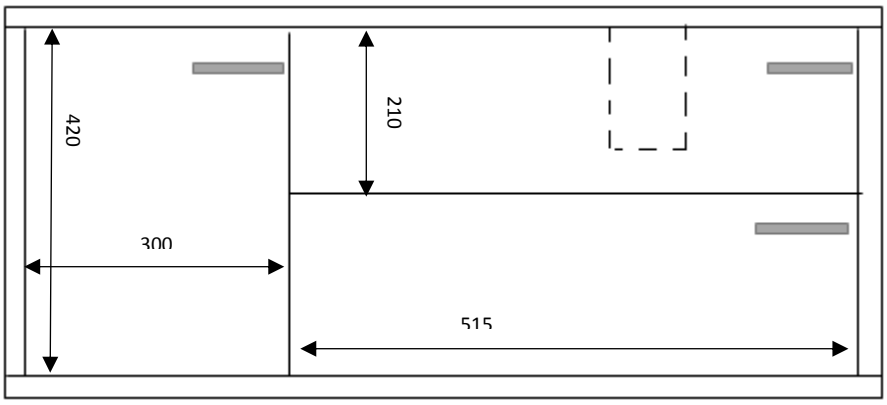

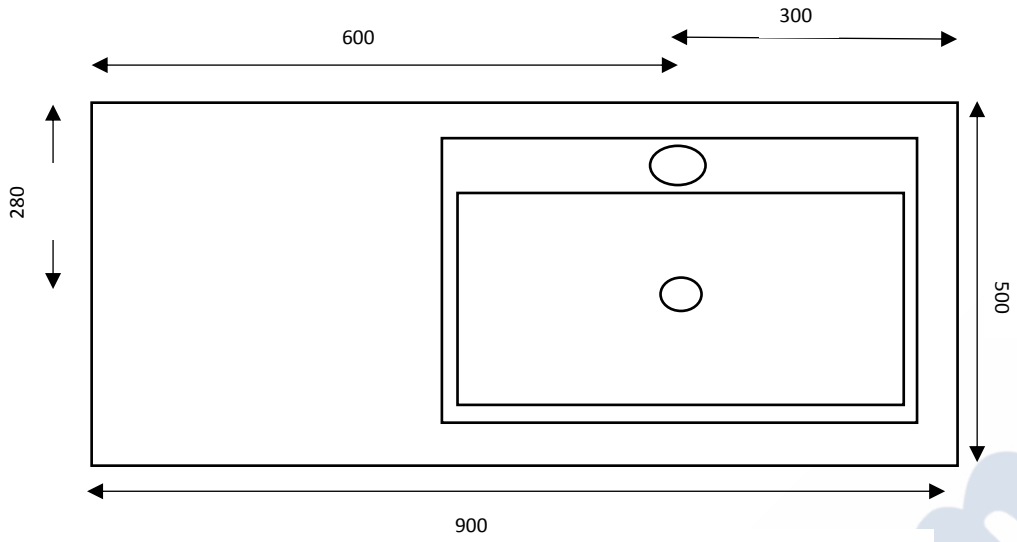

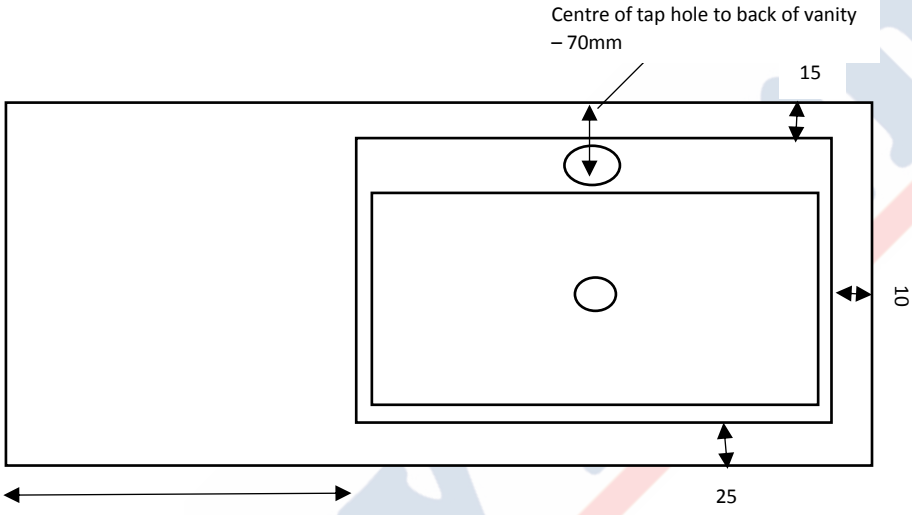

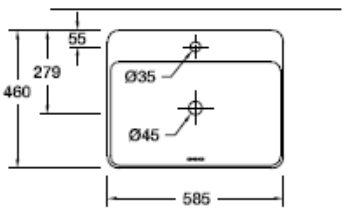

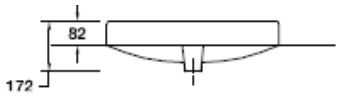

- Wall hung only
- Walnut textured cabinet
- Ceramic basin (1th)
- 1 soft close door
- 2 soft close drawers

- Kohler Forefront Rectangular Basin – 2660X-1-0
- VMETRO900WHNUT
- 900 x 500 x 500
- 110mm void from back of vanity to back of drawers
- No shelf

Metro 1200

1200 x 500 x 500

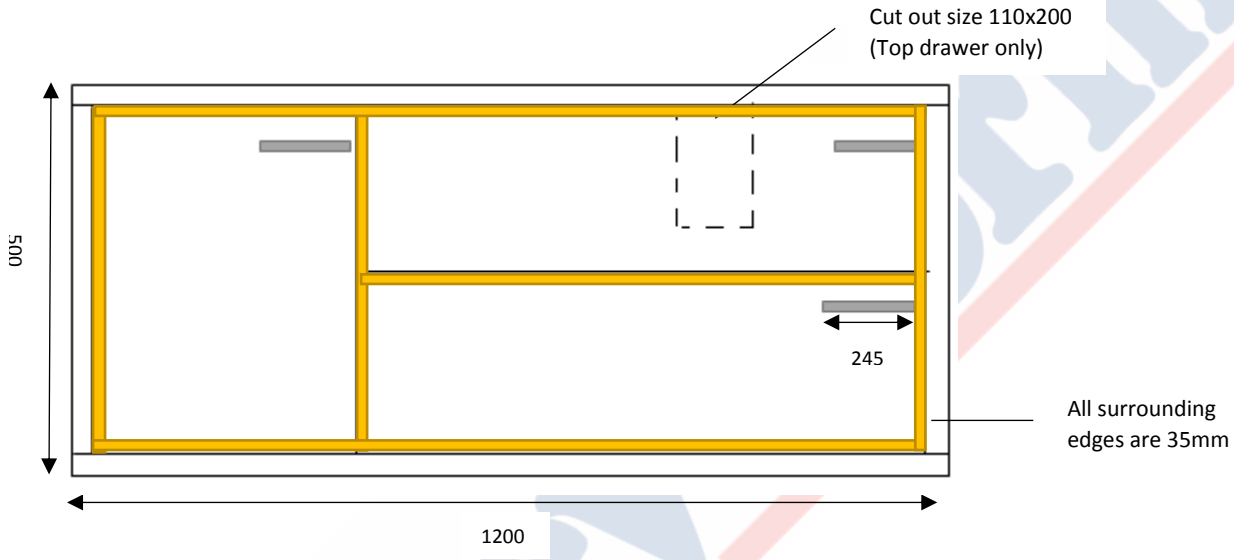

- Depth of door is 18mm
- Depth of drawer is 335mm
- Yellow lines indicate 5mm between surrounding edge and door/drawer
- 5mm gap between two drawers
- 395 inside of door from left wall to divider wall

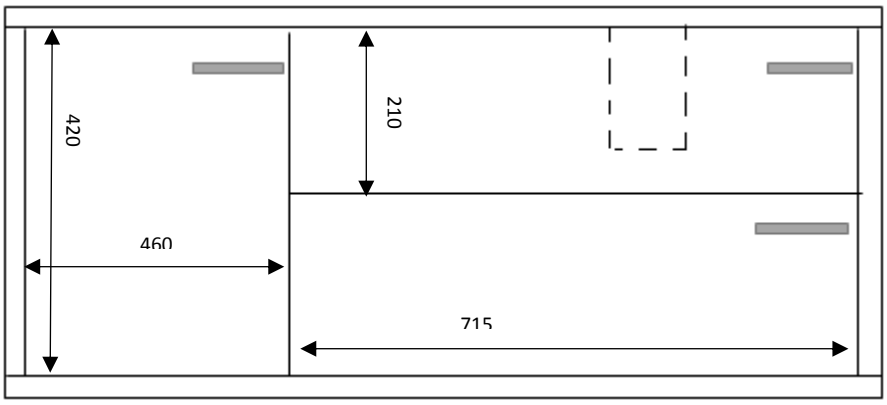

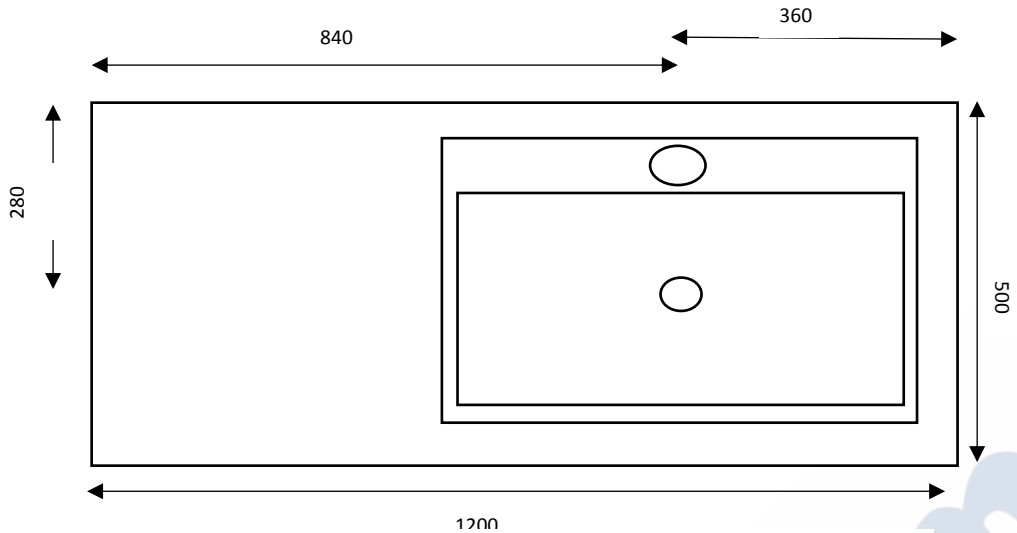

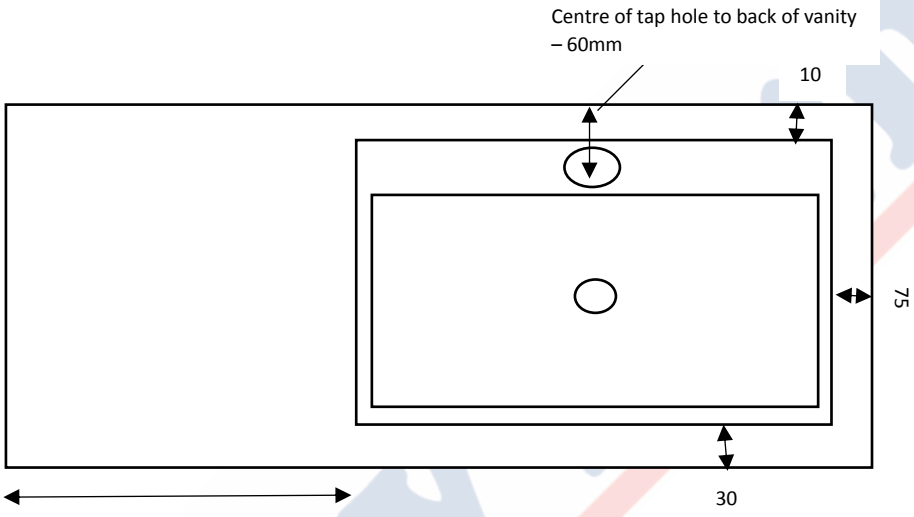

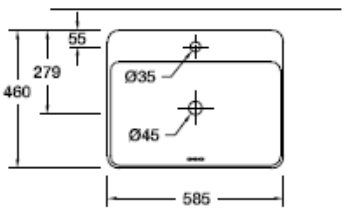

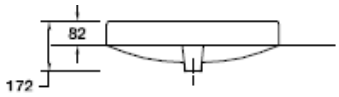

- Wall hung only
- Walnut textured cabinet
- Ceramic basin (1th)
- 1 soft close door
- 2 soft close drawers

- Kohler Forefront Rectangular Basin – 2660X-1-0
- VMETRO1200WHNUT
- 1200 x 500 x 500
- 110mm void from back of vanity to back of drawers
- No shelf

Neo 900

900 x 500 x 500

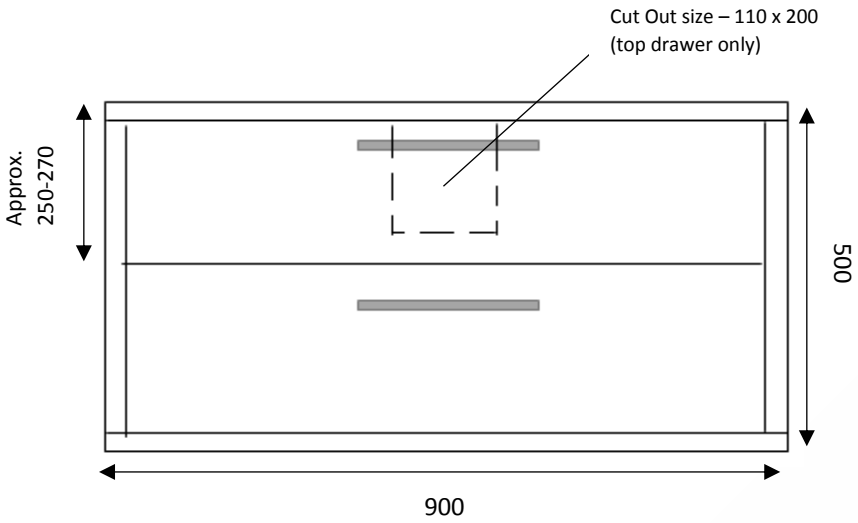

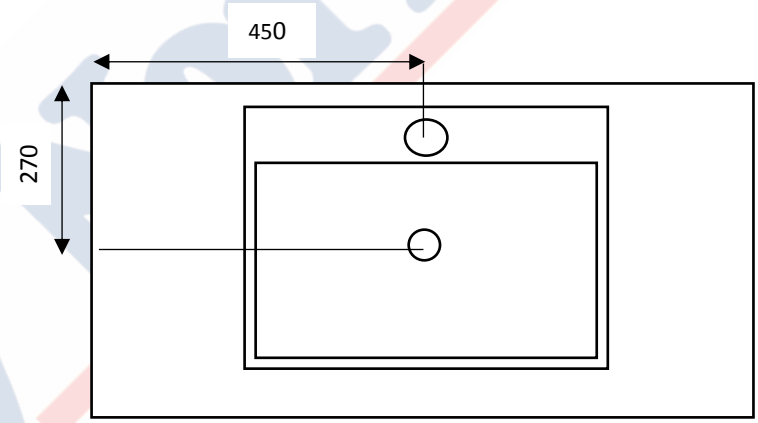

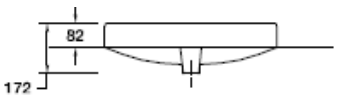

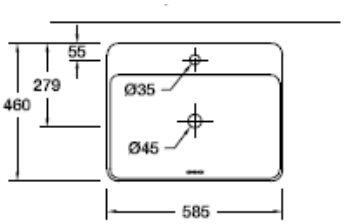

- Wall hung only
- Honey Ash textured cabinet
- Ceramic basin 1th
- 2 soft close drawers
- Kohler Forefront Rectangular Basin – 2660X-1-0
- VNEO900WHHA
- 900 x 500 x 500
- 100mm void

Neo 1200

1200 x 500 x 500

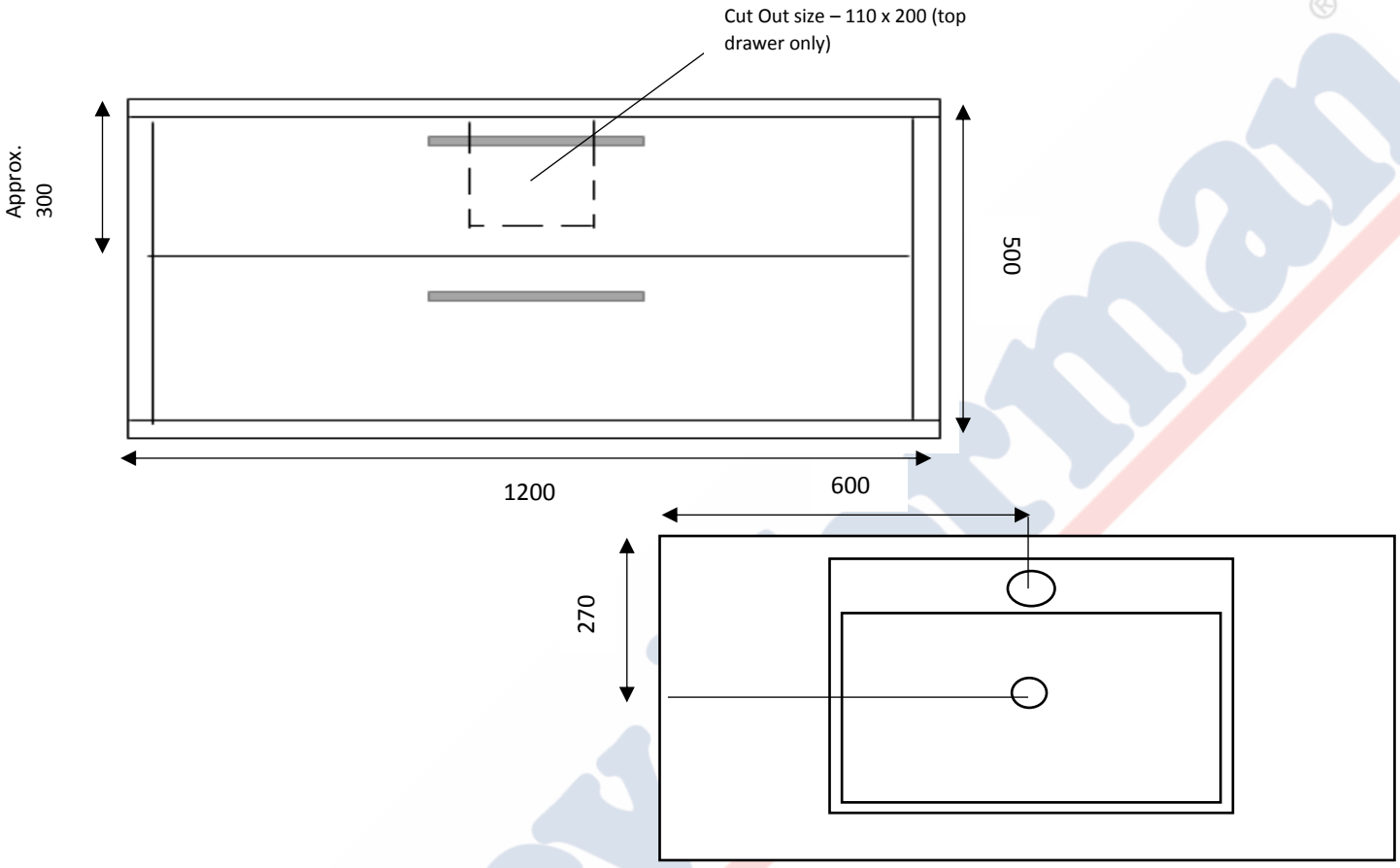

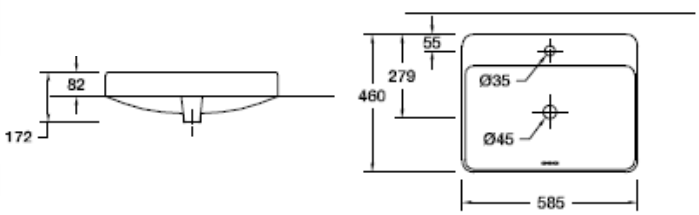

- Wall hung only
- Honey Ash textured cabinet
- Ceramic basin 1th
- 2 soft close drawers
- Kohler Forefront Rectangular Basin – 2660X-1-0
- VNEO120WHHA
- 1200 x 500 x 500
- 100mm void in drawers

Neo 1400

1400 x 500 x 500

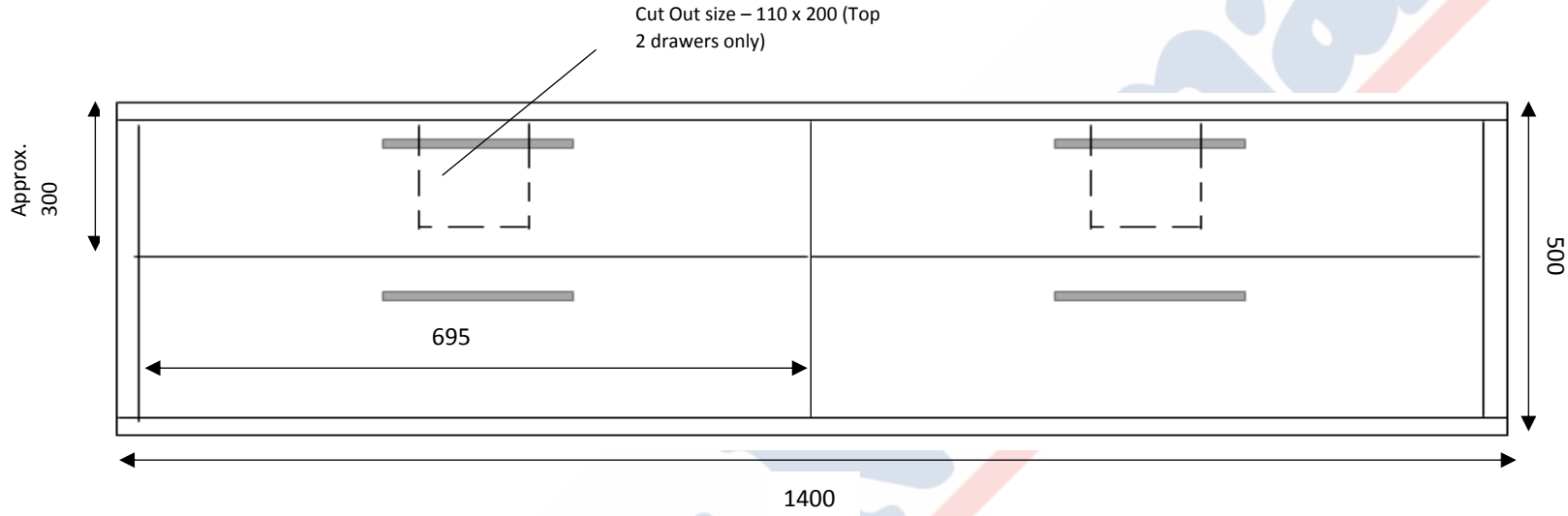

FORME BATHROOM COLLECTION

KOHLER®

Neo 1400

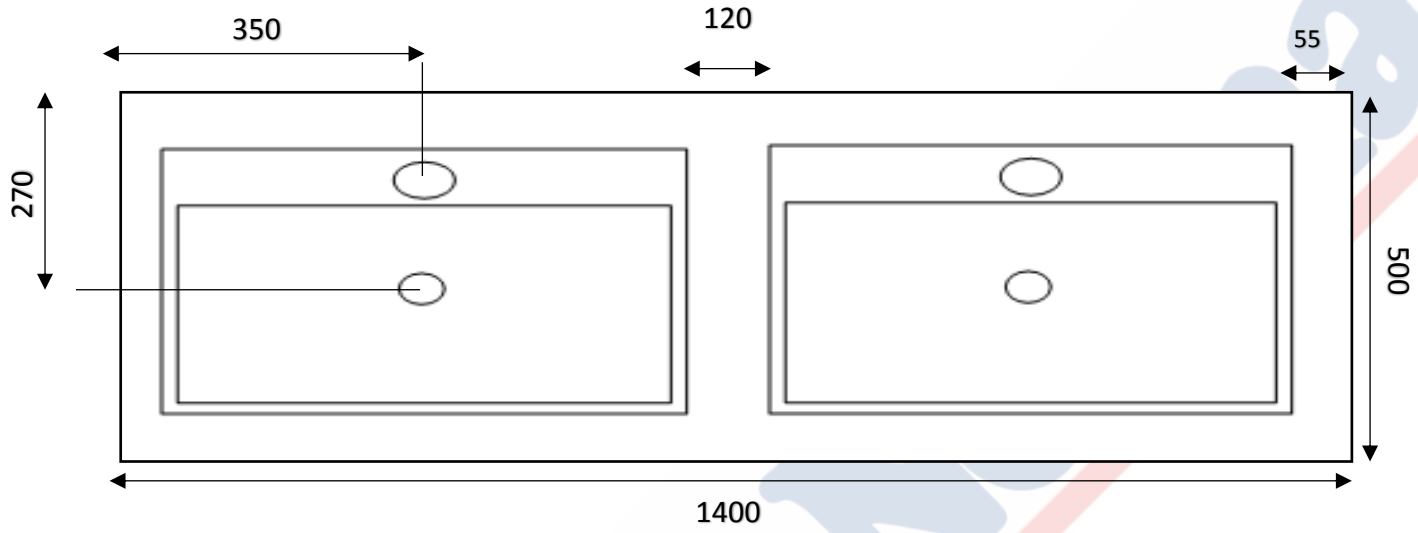

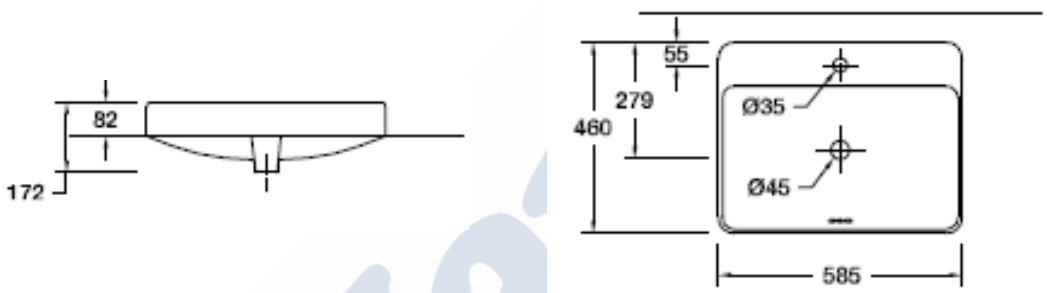

- Wall hung only
- Honey Ash textured cabinet
- Ceramic basin 1th (each basin)
- 4 soft close drawers
- Kohler Forefront Rectangular Basin – 2660X-1-0
- VNEO1400WHHA
- 1400 x 500 x 500
- 100mm void in drawers
- Double basin