Harvey Norman®

Online | Mobile | Your Local Store

SHOP *with* CONFIDENCE on Quality, Value and Service.

Call 1300 464 278 for your local store.

Bathroom & Tiles available at the following locations: • **HARVEY NORMAN FLAGSHIP STORE @ AUBURN** 9202 4888 • **BALGOWLAH SUPERSTORE** 9949 0100 • **CAMPBELLTOWN SUPERSTORE** 4621 5200 • **CARINGBAH HOMEMAKER CENTRE** 9589 8800 • **CASTLE HILL** 9840 8800 • **GORDON** 9496 9200 • **LIVERPOOL** 9600 3333 • **MASCOT** 9693 0710 • **PENRITH SUPERSTORE** 4737 5111 • **PUNCHBOWL** 9784 4400 • **BENNETTS GREEN** 4944 5000 • **ERINA** 4365 9888 • **WARRAWONG** 4223 8800 • **FYSHWICK** 6283 1200

Harvey Norman® stores are operated by independent franchisees.

METHVEN

Inspiration for planning your bathroom and kitchen

SHOWERS & TAPWARE

Collection

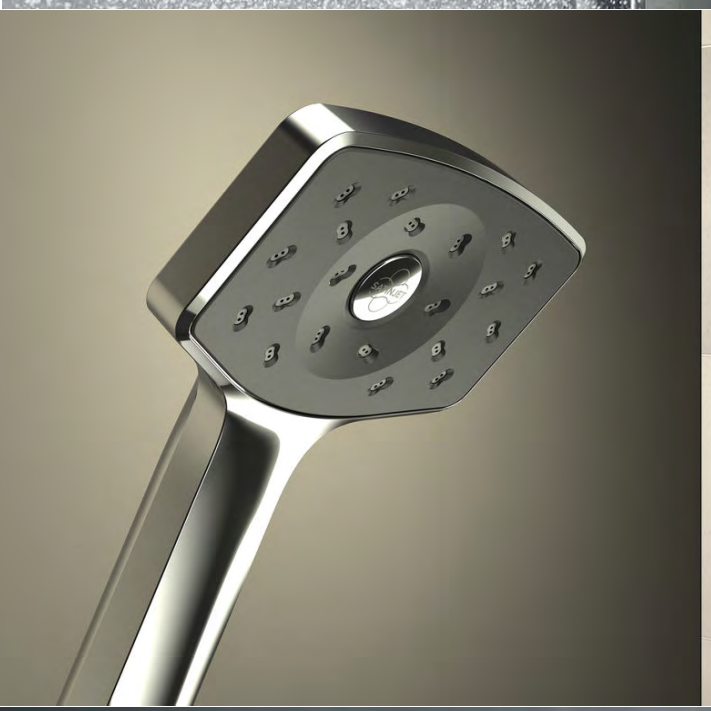

Committed to the environment

At Methven we're committed to protecting the planet and reducing our environmental impact to help conserve the earth's natural resources.

Water is the earth's most precious commodity. Currently around one fifth of the world lives in a water scarce region. And with water usage growing at twice the population rate, its preservation will only become more vital in years to come.

That's why at Methven we make taking care of water a primary focus in every product we develop.

For example, did you know that your shower uses around 30% of your household water consumption? So we've developed innovative technologies - such as Satinjet and Aurajet - that deliver a luxurious shower experience, all whilst actually using less water.

Methven. Conserving energy and water to protect the planet for generations to come.

METHVEN

15 YEAR WARRANTY* *TERMS & CONDITIONS APPLY

DESIGNED & ENGINEERED NEW ZEALAND

Waipori

01-8109

WAIPORI BASIN MIXER

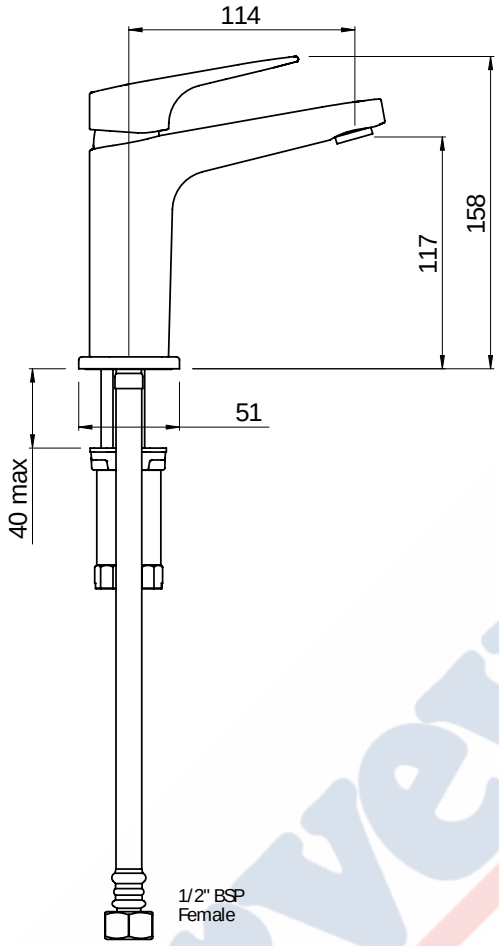

ASD Aerator

WATER RATING www.waterrating.gov.au 7.5 litres per minute In accordance with AS/NZS 6400 Licence No. 0095 Methven Australia Pty Ltd

FINISH: Chrome

CONSTRUCTION: Brass
CARTRIDGE TYPE: 25mm ceramic
SUPPLY: Mains Pressure
CONNECTIONS: 1/2" BSP Female
WORKING PRESSURES: 150 - 500 kpa
OPERATING TEMPERATURE: 5°C to 70°C*

*Refer AS/NZS 3500

- 25mm ceramic disc cartridge
- Solid easy-to-grip modular handle
- Solid brass construction for longevity
- Spout fitted with Adjustable Stream Direction Aerator with slim stream flow director
- Twin-stud mounting for secure basin installationb
- Stainless steel flexible hoses - 1/2" BSP female
- Suitable for mains pressure installation
- WELS 4 Star, 7.5l/min

THE METHVEN GUARANTEE. For total peace of mind, all domestic tapware products include a 15 Year Parts and Labour Guarantee. For commercial installations, a Five Year Guarantee on Parts and Labour and a 10 Year Guarantee on Cartridge Replacements applies. For full terms and conditions, visit www.methven.com.

METHVEN

15 YEAR WARRANTY* * TERMS & CONDITIONS APPLY

DESIGNED & ENGINEERED NEW ZEALAND

Waipori

01-8161

WAIPORI SHOWER MIXER

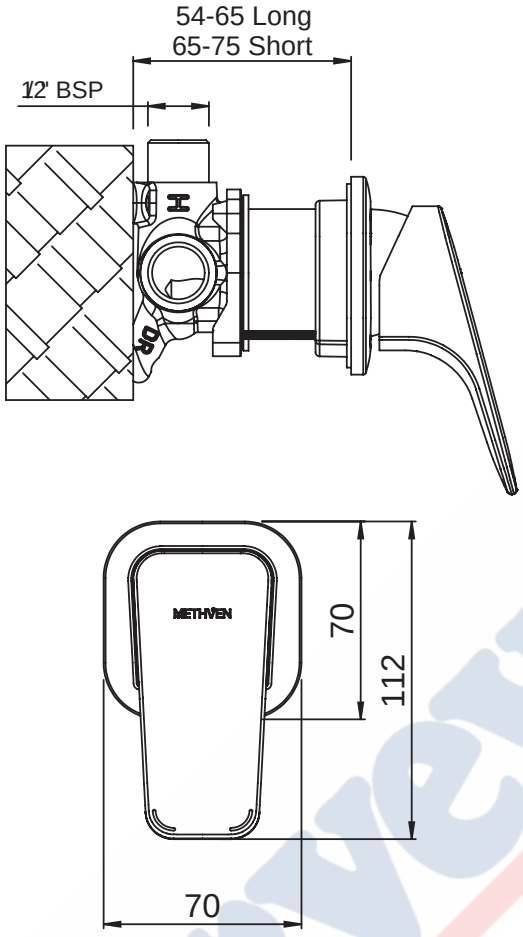

FINISH: Chrome

CONSTRUCTION: Brass
CARTRIDGE TYPE: 40mm ceramic
SUPPLY: Mains Pressure
CONNECTIONS: 1/2" BSP Female
WORKING PRESSURES: 150 - 500 kpa
OPERATING TEMPERATURE: 5°C to 70°C*

*Refer AS/NZS 3500

- Evenflo™ technology helps to ensure consistent water flow delivery to help prevent fluctuations in water temperature even when pressure is unbalanced. Precise temperature transition from cold to hot minimises the risk of scalding and thermal shock
- 40mm ceramic disc cartridge can be adjusted to reduce water temperature settings, saving energy
- Solid easy-to-grip modular handle
- Metal wall plate construction for longevity
- Two dome covers included to provide greater installation tolerance
- Incorporates brass lugs for ease of mounting
- Body inlets - 1/2" BSP female
- Suitable for mains pressure installation
- WELS rating not required

THE METHVEN GUARANTEE. For total peace of mind, all domestic tapware products include a 15 Year Parts and Labour Guarantee. For commercial installations, a Five Year Guarantee on Parts and Labour and a 10 Year Guarantee on Cartridge Replacements applies. For full terms and conditions, visit www.methven.com.

METHVEN

15 YEAR WARRANTY* *TERMS & CONDITIONS APPLY

DESIGNED & ENGINEERED NEW ZEALAND

Waipori

WASFSCPAU

WAIPORI SAFEFLOW SHOWER MIXER

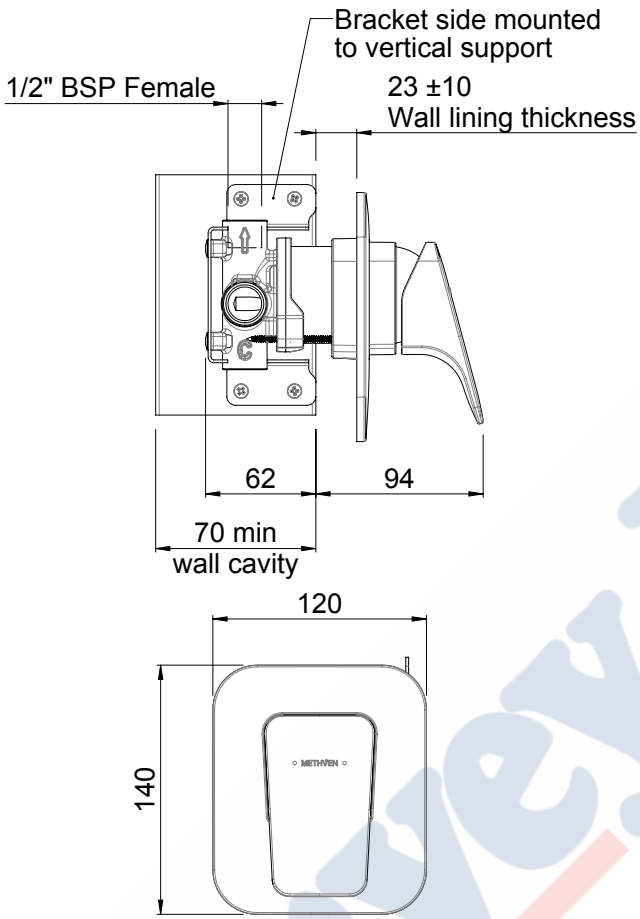

Safeflow™

FINISH: Chrome

CONSTRUCTION: Brass
CARTRIDGE TYPE: Ceramic, Safeflow™
SUPPLY: Mains Pressure
CONNECTIONS: 1/2" BSP Female
WORKING PRESSURES: 150 - 500 kpa
OPERATING TEMPERATURE: 5°C to 45°C*

*Refer AS/NZS 3500

- Featuring Safeflow™ technology, a temperature and flow regulator that is operated by a simple-to-use single lever. It delivers a stable maximum showering temperature of 45°C, even with erratic hot and cold pressure.
- Safety thermal element expands to cut off hot water supply if cold water pressure is lost. Preventing exposure to scalding water.
- Thermostatic Safeflow™ cartridge doesn't require manual calibration.
- Solid easy-to-grip handle
- Metal wall plate construction for longevity
- Suitable for wall cavities 70mm or greater
- Two dome covers included to provide greater installation tolerance
- Vertical mounting bracket provided for ease of mounting
- Body inlets – 1/2" BSP female
- Suitable for mains pressure installation
- WELS rating not required

THE METHVEN GUARANTEE. For total peace of mind, all domestic tapware products include a 15 Year Parts and Labour Guarantee. For commercial installations, a Five Year Guarantee on Parts and Labour and a 10 Year Guarantee on Cartridge Replacements applies. For full terms and conditions, visit www.methven.com.

METHVEN

15 YEAR WARRANTY* *TERMS & CONDITIONS APPLY

DESIGNED & ENGINEERED NEW ZEALAND

Waipori

01-8185

WAIPORI SHOWER MIXER WITH DIVERTER

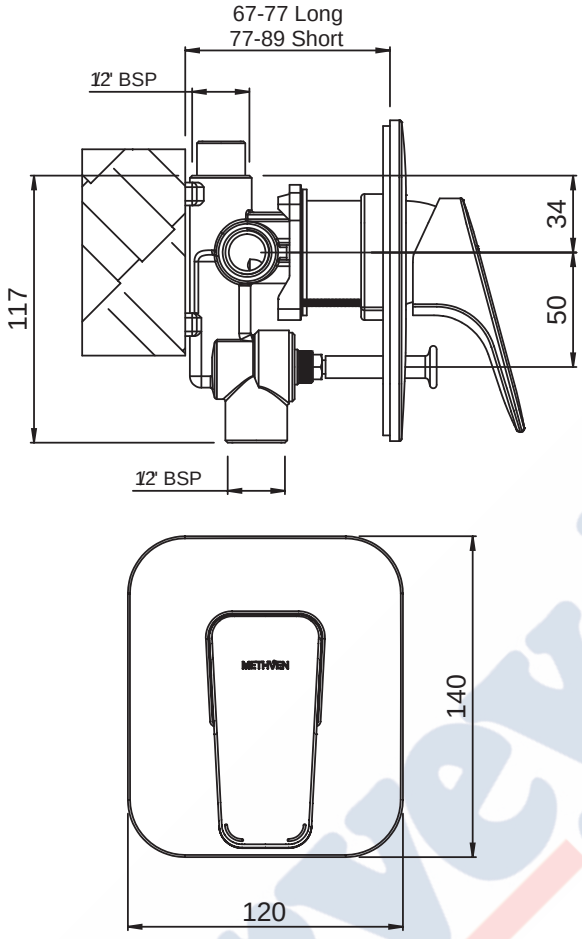

FINISH: Chrome

CONSTRUCTION: Brass
CARTRIDGE TYPE: 40mm ceramic
SUPPLY: Mains Pressure
CONNECTIONS: 1/2" BSP Female
WORKING PRESSURES: 150 - 500 kpa
OPERATING TEMPERATURE: 5°C to 70°C*

*Refer AS/NZS 3500

- Evenflo™ technology helps to ensure consistent water flow delivery to help prevent fluctuations in water temperature even when pressure is unbalanced. Precise temperature transition from cold to hot minimises the risk of scalding and thermal shock
- 40mm ceramic disc cartridge can be adjusted to reduce water temperature settings, saving energy
- Solid easy-to-grip modular handle
- Shower mixer with pull-out diverter defaults to bath spout
- Metal wall plate construction for longevity
- Two dome covers included to provide greater installation tolerance
- Incorporates brass lugs for ease of mounting
- Body inlets - 1/2" BSP female
- Suitable for mains pressure installation
- WELS rating not required

THE METHVEN GUARANTEE. For total peace of mind, all domestic tapware products include a 15 Year Parts and Labour Guarantee. For commercial installations, a Five Year Guarantee on Parts and Labour and a 10 Year Guarantee on Cartridge Replacements applies. For full terms and conditions, visit www.methven.com.

METHVEN

15 YEAR WARRANTY* *TERMS & CONDITIONS APPLY

DESIGNED & ENGINEERED NEW ZEALAND

Waipori

01-8123

WAIPORI WALL MOUNTED BASIN MIXER WITH PLATE

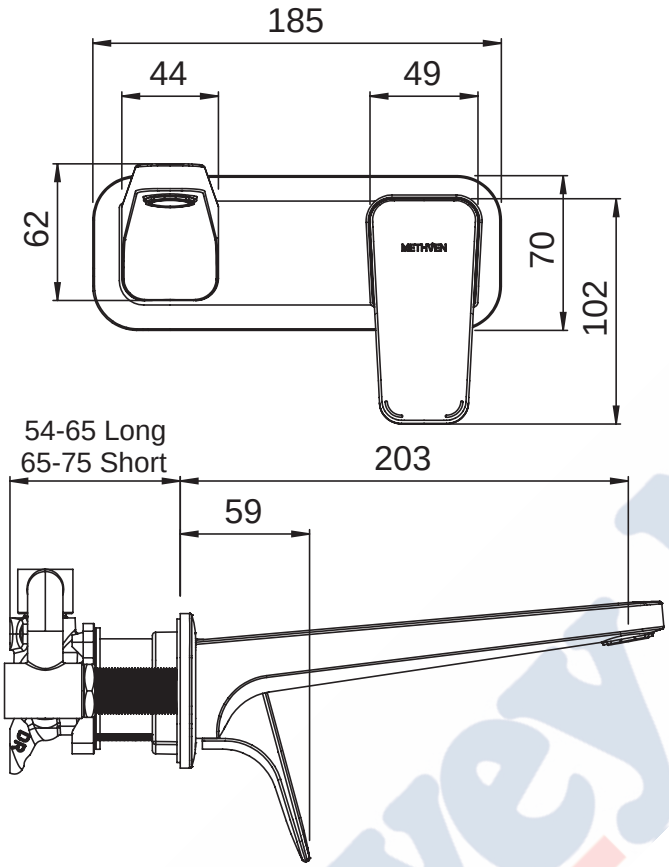

ASD Aerator

WATER RATING www.waterrating.gov.au 7.5 litres per minute In accordance with AS/NZS 6400 Licence No. 0095 Methven Australia Pty Ltd

FINISH: Chrome

CONSTRUCTION: Brass body & spout / Metal plate
CARTRIDGE TYPE: 40mm ceramic
SUPPLY: Mains Pressure
CONNECTIONS: 1/2" BSP Female
WORKING PRESSURES: 150 - 500 kpa
OPERATING TEMPERATURE: 5°C to 70°C*

*Refer AS/NZS 3500

- 40mm ceramic disc cartridge can be adjusted to reduce water temperature settings, saving energy
- Metal wall plate and cast brass spout for longevity
- Solid easy-to-grip modular handle
- Spout fitted with Adjustable Stream Direction Aerator with slim stream flow director
- Includes wall breech
- Left-hand outlet only
- Two dome covers included to provide greater installation tolerance
- Body inlets – 1/2" BSP female
- Suitable for mains pressure installation
- WELS 4 Star, 7.5l/min

THE METHVEN GUARANTEE. For total peace of mind, all domestic tapware products include a 15 Year Parts and Labour Guarantee. For commercial installations, a Five Year Guarantee on Parts and Labour and a 10 Year Guarantee on Cartridge Replacements applies. For full terms and conditions, visit www.methven.com.

METHVEN

15 YEAR WARRANTY* *TERMS & CONDITIONS APPLY

DESIGNED NEW ZEALAND & ENGINEERED

Waipori

01-8246

WAIPORI WALL MOUNTED BATH MIXER WITH PLATE

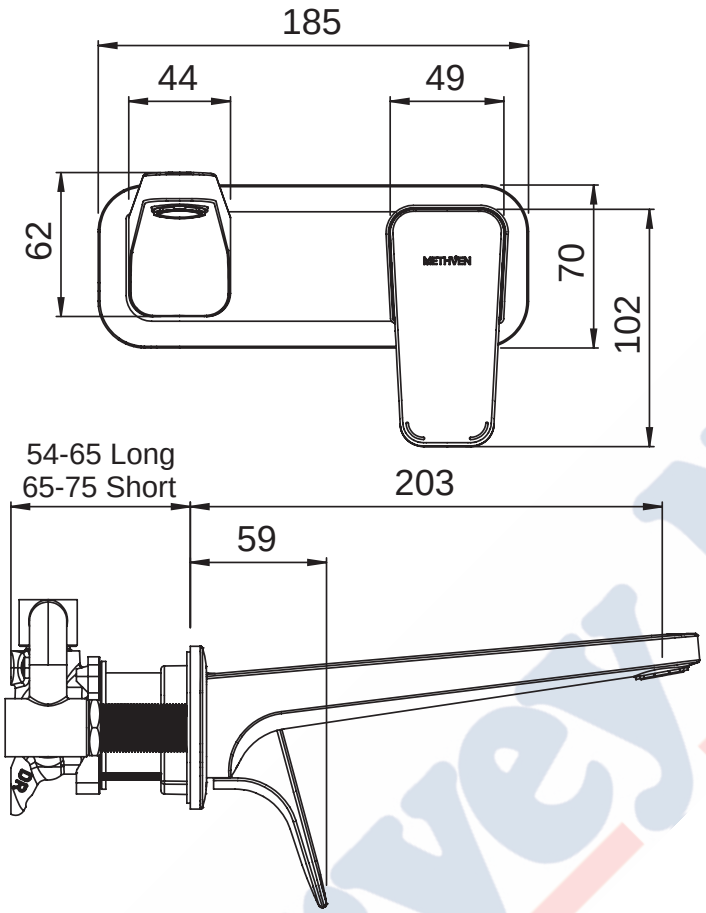

ASD Aerator

FINISH: Chrome

CONSTRUCTION: Brass body & spout / Metal plate
CARTRIDGE TYPE: 40mm ceramic
SUPPLY: Mains Pressure
CONNECTIONS: 1/2" BSP Female
WORKING PRESSURES: 150 - 500 kpa
OPERATING TEMPERATURE: 5°C to 70°C*

*Refer AS/NZS 3500

- 40mm ceramic disc cartridge can be adjusted to reduce water temperature settings, saving energy
- Metal wall plate and cast brass spout for longevity
- Solid easy-to-grip modular handle
- Spout fitted with Adjustable Stream Direction Aerator
- Includes wall breech
- Left-hand outlet only
- Two dome covers included to provide greater installation tolerance
- Body inlets – 1/2" BSP female
- Suitable for mains pressure installation
- WELS rating not required

THE METHVEN GUARANTEE. For total peace of mind, all domestic tapware products include a 15 Year Parts and Labour Guarantee. For commercial installations, a Five Year Guarantee on Parts and Labour and a 10 Year Guarantee on Cartridge Replacements applies. For full terms and conditions, visit www.methven.com.

METHVEN

15 YEAR WARRANTY* *TERMS & CONDITIONS APPLY

DESIGNED NEW ZEALAND & ENGINEERED

Waipori

01-8307

WAIPORI 3 HOLE HOB MOUNTED BATH SET

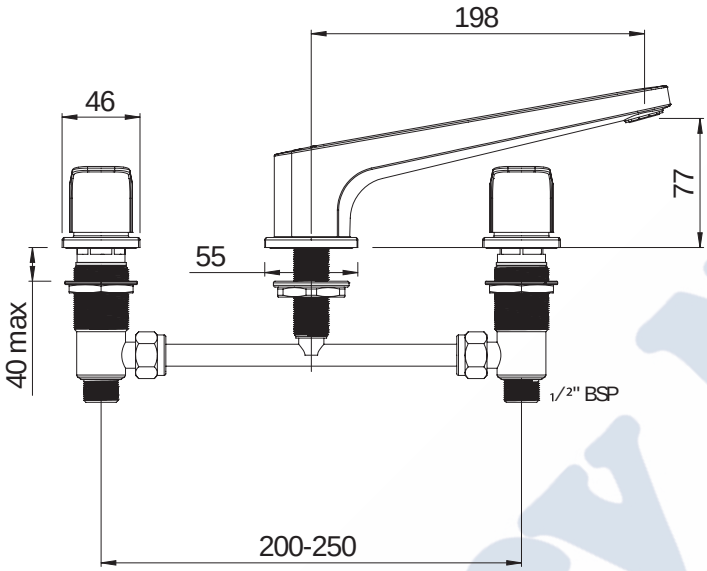

ASD Aerator

FINISH: Chrome

CONSTRUCTION: Brass
CARTRIDGE TYPE: 1/4 ceramic disc
SUPPLY: Mains Pressure
CONNECTIONS: 1/2" BSP Female
WORKING PRESSURES: 150 - 500 kpa
OPERATING TEMPERATURE: 5°C to 70°C*

*Refer AS/NZS 3500

- 1/4 turn ceramic disc technology
- Cast brass spout
- Contra-rotating handles
- Solid easy-to-grip modular handles
- Spout fitted with Adjustable Stream Direction Aerator
- Includes breech
- Suitable for mains pressure installation
- WELS rating not required

THE METHVEN GUARANTEE. For total peace of mind, all domestic tapware products include a 15 Year Parts and Labour Guarantee. For commercial installations, a Five Year Guarantee on Parts and Labour and a 10 Year Guarantee on Cartridge Replacements applies. For full terms and conditions, visit www.methven.com.

METHVEN

15 YEAR WARRANTY* *TERMS & CONDITIONS APPLY

DESIGNED & ENGINEERED NEW ZEALAND

Waipori

01-8321

WAIPORI 3 HOLE WALL MOUNTED BASIN SET WITH PLATE

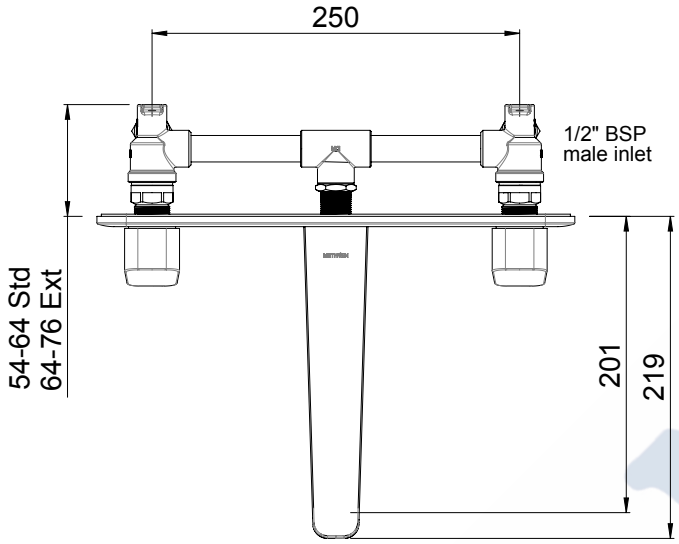

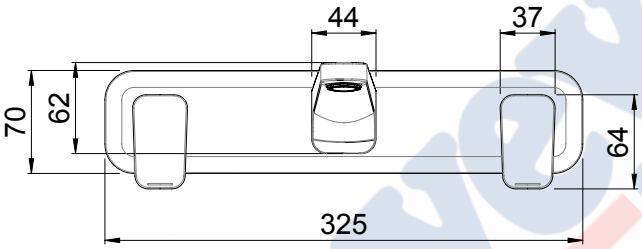

ASD Aerator

WATER RATING www.waterrating.gov.au 7.5 litres per minute In accordance with AS/NZS 6400 Licence No. 0095 Methven Australia Pty Ltd

FINISH: Chrome

CONSTRUCTION: Brass spout / Metal plate
CARTRIDGE TYPE: 1/4 turn ceramic disc
SUPPLY: Mains Pressure
CONNECTIONS: 1/2" BSP Female
WORKING PRESSURES: 150 - 500 kpa
OPERATING TEMPERATURE: 5°C to 70°C*

*Refer AS/NZS 3500

- 1/4 turn ceramic disc technology
- Metal wall plate and cast brass spout for longevity
- Contra-rotating handles
- Solid easy-to-grip modular handles
- Spout fitted with Adjustable Stream Direction Aerator with slim stream flow director
- Includes wall breech
- Body inlets – 1/2" BSP female
- Suitable for mains pressure installation
- WELS 4 Star, 7.5l/min

THE METHVEN GUARANTEE. For total peace of mind, all domestic tapware products include a 15 Year Parts and Labour Guarantee. For commercial installations, a Five Year Guarantee on Parts and Labour and a 10 Year Guarantee on Cartridge Replacements applies. For full terms and conditions, visit www.methven.com.

METHVEN

15 YEAR WARRANTY* *TERMS & CONDITIONS APPLY

DESIGNED & ENGINEERED NEW ZEALAND

Waipori

01-8345

WAIPORI 3 HOLE WALL MOUNTED BATH SET

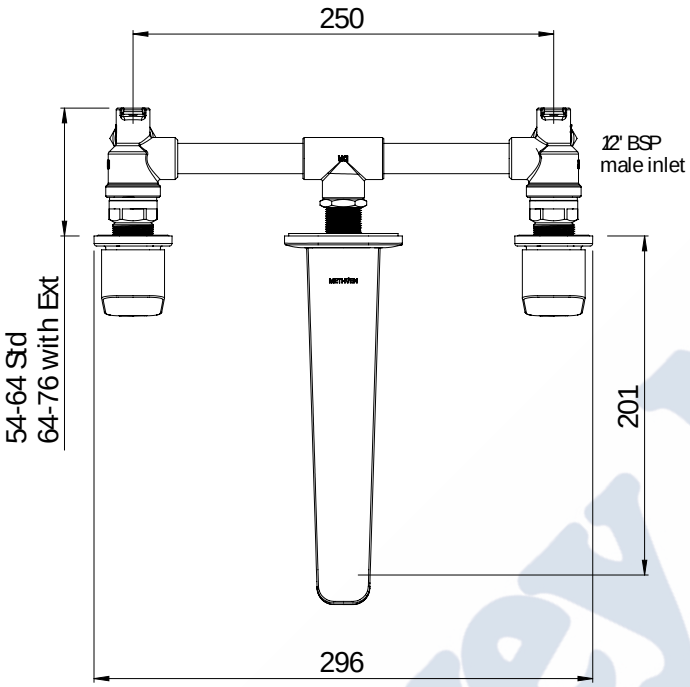

ASD Aerator

FINISH: Chrome

CONSTRUCTION: Brass spout
CARTRIDGE TYPE: 1/4 turn ceramic disc
SUPPLY: Mains Pressure
CONNECTIONS: 1/2" BSP Female
WORKING PRESSURES: 150 - 500 kpa
OPERATING TEMPERATURE: 5°C to 70°C*

*Refer AS/NZS 3500

- 1/4 turn ceramic disc technology
- Cast brass spout
- Contra-rotating handles
- Solid easy-to-grip modular handles
- Spout fitted with Adjustable Stream Direction Aerator
- Includes wall breech
- Body inlets – 1/2" BSP female
- Suitable for mains pressure installation
- WELS rating not required

THE METHVEN GUARANTEE. For total peace of mind, all domestic tapware products include a 15 Year Parts and Labour Guarantee. For commercial installations, a Five Year Guarantee on Parts and Labour and a 10 Year Guarantee on Cartridge Replacements applies. For full terms and conditions, visit www.methven.com.

METHVEN

15 YEAR WARRANTY* *TERMS & CONDITIONS APPLY

DESIGNED NEW ZEALAND & ENGINEERED

Waipori

01-8444

WAIPORI WALL TOP ASSEMBLY PAIR

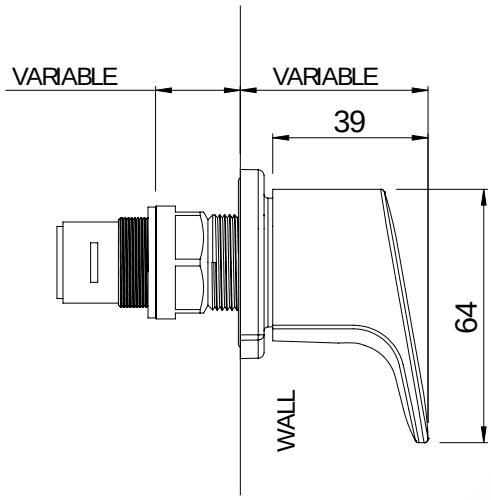

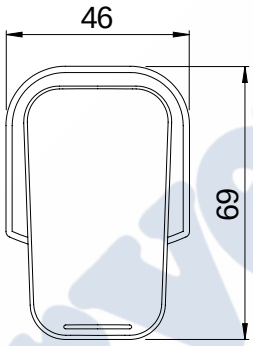

FINISH: Chrome

CONSTRUCTION: Brass
CARTRIDGE TYPE: 1/4 turn ceramic disc
SUPPLY: Mains Pressure
CONNECTIONS: Suitable for standard breech
WORKING PRESSURES: 150 - 500 kpa
OPERATING TEMPERATURE: 5°C to 70°C*

*Refer AS/NZS 3500

- Standard Pair
- 1/4 turn ceramic disc technology
- Contra-rotating handles
- Solid easy-to-grip modular handles
- Suitable for use with Waipori Basin and Bath Spouts
- Suitable for retro-fit to existing wall breech
- Suitable for mains pressure installation
- WELS rating not required

THE METHVEN GUARANTEE. For total peace of mind, all domestic tapware products include a 15 Year Parts and Labour Guarantee. For commercial installations, a Five Year Guarantee on Parts and Labour and a 10 Year Guarantee on Cartridge Replacements applies. For full terms and conditions, visit www.methven.com.

METHVEN

15 YEAR WARRANTY* * TERMS & CONDITIONS APPLY

DESIGNED NEW ZEALAND & ENGINEERED

Waipori

01-8369

WAIPORI WALL MOUNTED BATH SPOUT

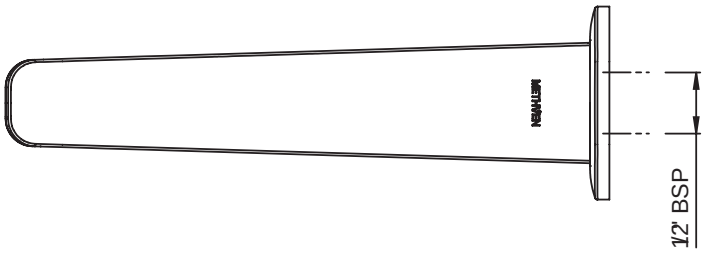

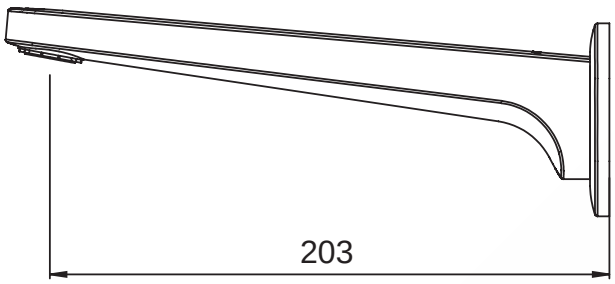

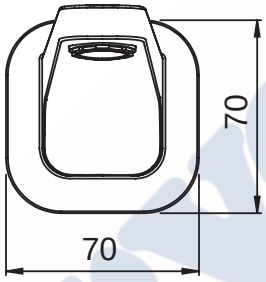

ASD Aerator

FINISH: Chrome

CONSTRUCTION: Brass
CARTRIDGE TYPE: -
SUPPLY: Mains Pressure
CONNECTIONS: 1/2" BSP Female / Push-fit
WORKING PRESSURES: 150 - 500 kpa
OPERATING TEMPERATURE: 5°C to 70°C*

*Refer AS/NZS 3500

- Cast brass spout
- ASD aerator with slim stream flow director
- To complete the look, suitable for use with Waipori shower mixer or wall top assemblies *(sold separately)*
- Inlet – 1/2" BSP female push-fit connection
- WELS rating not required

THE METHVEN GUARANTEE. For total peace of mind, all domestic tapware products include a 15 Year Parts and Labour Guarantee. For commercial installations, a Five Year Guarantee on Parts and Labour and a 10 Year Guarantee on Cartridge Replacements applies. For full terms and conditions, visit www.methven.com.

METHVEN

15 YEAR WARRANTY* *TERMS & CONDITIONS APPLY

DESIGNED & ENGINEERED NEW ZEALAND

Waipori

01-8383

WAIPORI WALL MOUNTED BASIN SPOUT

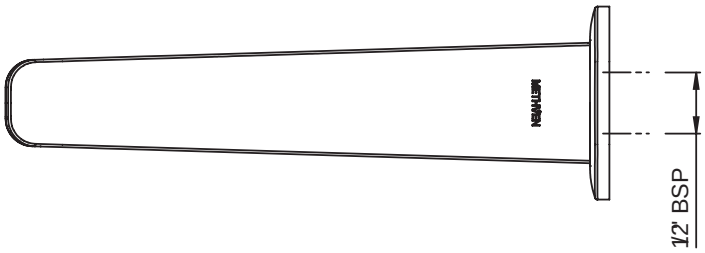

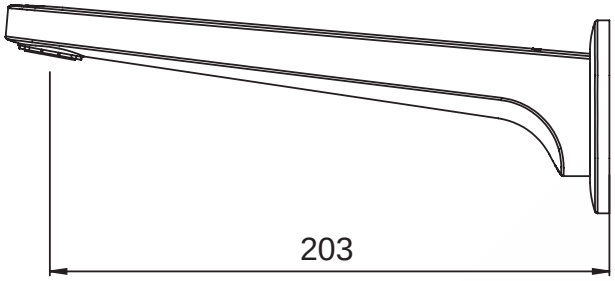

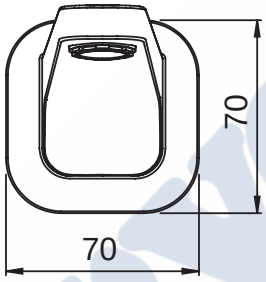

ASD Aerator

WATER RATING www.waterrating.gov.au 7.5 litres per minute Licence No. 0095

FINISH: Chrome

CONSTRUCTION: Brass
CARTRIDGE TYPE: -
SUPPLY: Mains Pressure
CONNECTIONS: 1/2" BSP Female / Push-fit
WORKING PRESSURES: 150 - 500 kpa
OPERATING TEMPERATURE: 5°C to 70°C*

*Refer AS/NZS 3500

- Cast brass spout
- ASD aerator with slim stream flow director
- To complete the look, suitable for use with Waipori shower mixer or wall top assemblies *(sold separately)*
- Inlet – 1/2" BSP female push-fit connection
- WELS 4 Star, 7.5l/min

THE METHVEN GUARANTEE. For total peace of mind, all domestic tapware products include a 15 Year Parts and Labour Guarantee. For commercial installations, a Five Year Guarantee on Parts and Labour and a 10 Year Guarantee on Cartridge Replacements applies. For full terms and conditions, visit www.methven.com.

METHVEN

15 YEAR WARRANTY* *TERMS & CONDITIONS APPLY

DESIGNED & ENGINEERED NEW ZEALAND

Waipori

01-8222

WAIPORI SINK MIXER

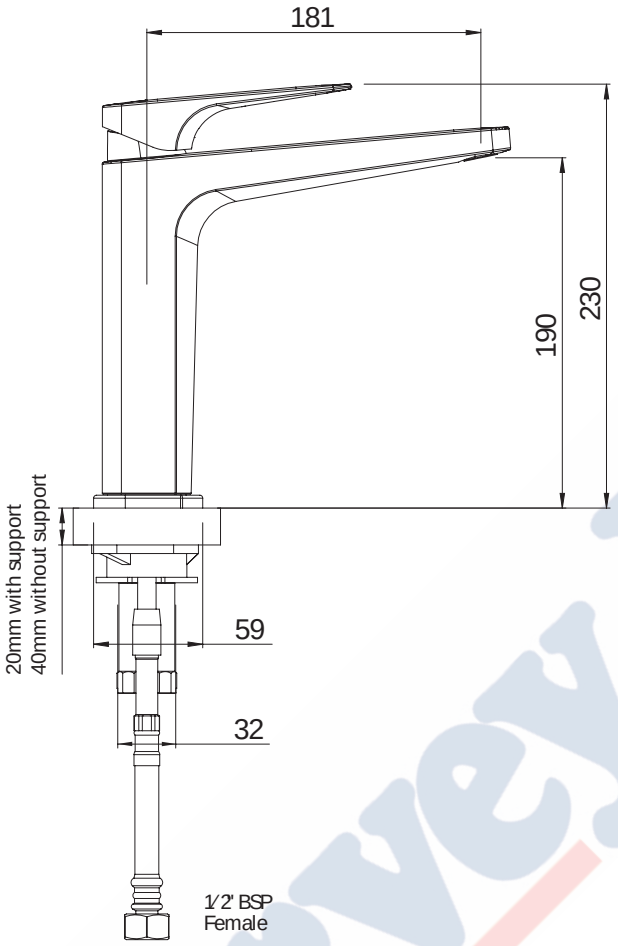

ASD Aerator

WATER RATING www.waterrating.gov.au 7.5 litres per minute Licence No. 0095

FINISH: Chrome

CONSTRUCTION: Brass
CARTRIDGE TYPE: 40mm ceramic
SUPPLY: Mains Pressure
CONNECTIONS: 1/2" BSP Female
WORKING PRESSURES: 150 - 500 kpa
OPERATING TEMPERATURE: 5°C to 70°C*

*Refer AS/NZS 3500

- 35mm ceramic disc cartridge
- Concealed swivel operation at base of mixer
- Solid easy-to-grip modular handle
- Solid brass construction for longevity
- Spout fitted with Adjustable Stream Direction Aerator
- Stainless steel flexible hoses - 1/2" BSP female
- Suitable for mains pressure installation
- WELS 4 Star, 7.5l/min

THE METHVEN GUARANTEE. For total peace of mind, all domestic tapware products include a 15 Year Parts and Labour Guarantee. For commercial installations, a Five Year Guarantee on Parts and Labour and a 10 Year Guarantee on Cartridge Replacements applies. For full terms and conditions, visit www.methven.com.

METHVEN

15 YEAR WARRANTY* * TERMS & CONDITIONS APPLY

DESIGNED NEW ZEALAND & ENGINEERED

Waipori

01-8260

WAIPORI BIDET MIXER

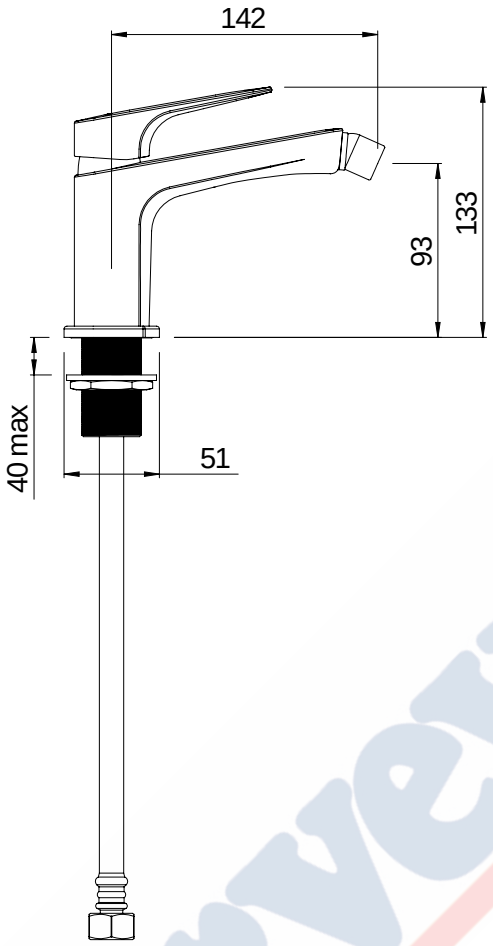

FINISH: Chrome

CONSTRUCTION: Brass
CARTRIDGE TYPE: 25mm ceramic
SUPPLY: Mains Pressure
CONNECTIONS: 1/2" BSP Female
WORKING PRESSURES: 150 - 500 kpa
OPERATING TEMPERATURE: 5°C to 70°C*

*Refer AS/NZS 3500

- 25mm ceramic disc cartridge
- Solid brass construction for longevity
- Solid easy-to-grip modular handle
- Ball-joint spray outlet fitted with aerator
- Single hole installation
- Stainless steel flexible hoses – 1/2" BSP female
- Pop-up waste set 40mm
- Suitable for mains pressure installation
- WELS rating not required

THE METHVEN GUARANTEE. For total peace of mind, all domestic tapware products include a 15 Year Parts and Labour Guarantee. For commercial installations, a Five Year Guarantee on Parts and Labour and a 10 Year Guarantee on Cartridge Replacements applies. For full terms and conditions, visit www.methven.com.

METHVEN

LIFE TIME WARRANTY* *TERMS & CONDITIONS APPLY

DESIGNED & ENGINEERED NEW ZEALAND

Waipori

WASSCPWHAU

WAIPORI SATINJET TWIN SHOWER SYSTEM

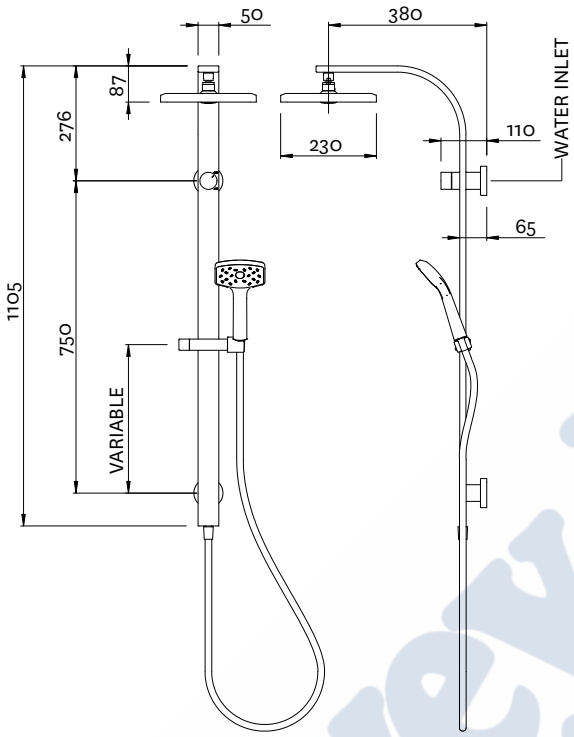

Satinjet®

1

Twist Free Hose

WATER RATING www.waterrating.gov.au 9.0 litres per minute In accordance with AS/NZS 6400 Licence No. 0095 Methven Australia Pty Ltd

FINISH: Chrome/Graphite

FUNCTIONS: Satinjet®
MOUNTING METHOD: Twin solid mounting
SUPPLY: Mains Pressure
CONNECTIONS: 1/2" BSP Female
WORKING PRESSURES: 150 - 500 kpa
OPERATING TEMPERATURE: Recommended 50°C*

*Refer AS/NZS 3500

- Features the revolutionary Satinjet® spray design. Twin jets of water collide into thousands of tiny droplets to deliver voluminous shower coverage
- Single function handset featuring Satinjet® spray
- Single function 230mm square overhead shower featuring Satinjet® spray
- Easily switches from handset to overhead shower with the integrated water diverter
- Twin rail with in-built water delivery point to eliminate the need for a separate wall elbow
- Height adjustable handset holder with twist action slider
- Easy-to-clean faceplate
- Strong and durable, SatinLux hose
- Stylish graphite faceplate colour

THE METHVEN GUARANTEE. For total peace of mind, all domestic shower products include a Lifetime Replacement Guarantee. For commercial installations, Satinjet® showers carry a 15 Year Replacement Warranty. For full terms and conditions, visit www.methven.com.

METHVEN

LIFE TIME WARRANTY* *TERMS & CONDITIONS APPLY

DESIGNED NEW ZEALAND & ENGINEERED

Waipori

WASRCPGRAU
WAIPORI GRAPHITE SATINJET RAIL SHOWER

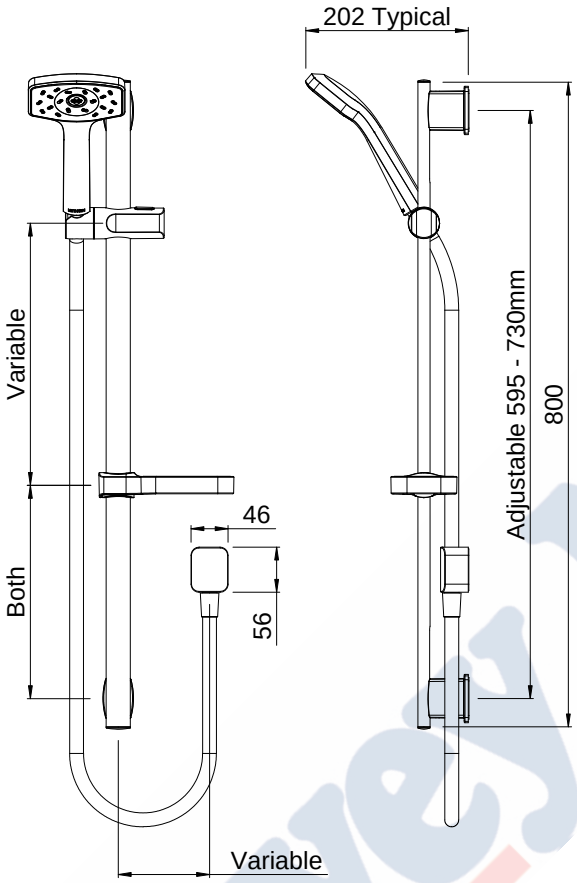

Satinjet®

Twist Free Hose

WATER RATING www.waterrating.gov.au 9.0 litres per minute In accordance with AS/NZS 6400 Licence No. 0095 Methven Australia Pty Ltd

FINISH: Chrome/White

FUNCTIONS: Satinjet®
MOUNTING METHOD: Adjustable mounting points
SUPPLY: Mains Pressure
CONNECTIONS: 1/2" BSP Female
WORKING PRESSURES: 150 - 500 kpa
OPERATING TEMPERATURE: Recommended 50°C*

*Refer AS/NZS 3500

- Features the revolutionary Satinjet® spray design. Twin jets of water collide into thousands of tiny droplets to deliver voluminous shower coverage
- Single function handset featuring Satinjet® spray
- Easy-to-clean faceplate
- High quality 800mm oval rail with adjustable mounting point
- Height adjustable handset holder with push button slider
- Stylish chrome soap dish and wall elbow included
- Strong and durable, SatinLux hose
- Stylish white faceplate colour

THE METHVEN GUARANTEE. For total peace of mind, all domestic shower products include a Lifetime Replacement Guarantee. For commercial installations, Satinjet® showers carry a 15 Year Replacement Warranty. For full terms and conditions, visit www.methven.com.

METHVEN

LIFE TIME WARRANTY* *TERMS & CONDITIONS APPLY

DESIGNED & ENGINEERED NEW ZEALAND

Waipori

WASSCPWHAU

WAIPORI SATINJET TWIN SHOWER SYSTEM

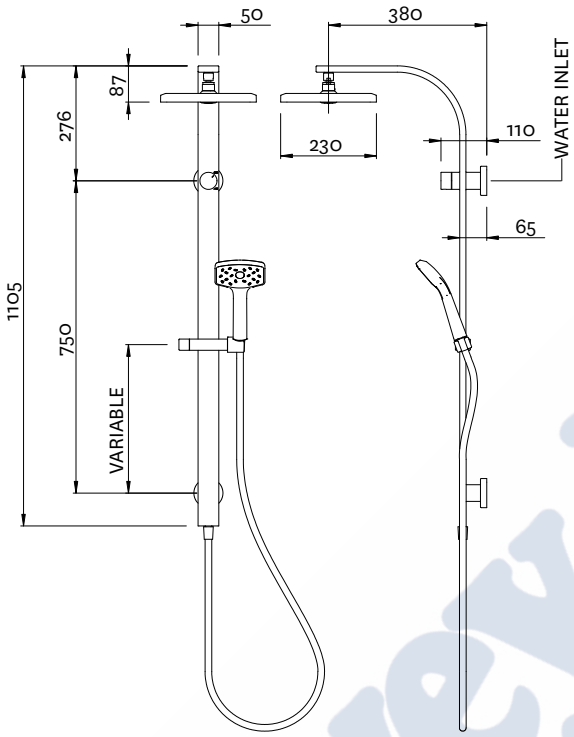

Satinjet®

1

Twist Free Hose

WATER RATING www.waterrating.gov.au 9.0 litres per minute In accordance with AS/NZS 6400 Licence No. 0095 Methven Australia Pty Ltd

FINISH: Chrome/White

FUNCTIONS: Satinjet®

MOUNTING METHOD: Twin solid mounting

SUPPLY: Mains Pressure

CONNECTIONS: 1/2" BSP Female

WORKING PRESSURES: 150 - 500 kpa

OPERATING TEMPERATURE: Recommended 50°C*

*Refer AS/NZS 3500

- Features the revolutionary Satinjet® spray design. Twin jets of water collide into thousands of tiny droplets to deliver voluminous shower coverage
- Single function handset featuring Satinjet® spray
- Single function 230mm square overhead shower featuring Satinjet® spray
- Easily switches from handset to overhead shower with the integrated water diverter
- Twin rail with in-built water delivery point to eliminate the need for a separate wall elbow
- Height adjustable handset holder with twist action slider
- Easy-to-clean faceplate
- Strong and durable, SatinLux hose
- Stylish white faceplate colour

THE METHVEN GUARANTEE. For total peace of mind, all domestic shower products include a Lifetime Replacement Guarantee. For commercial installations, Satinjet® showers carry a 15 Year Replacement Warranty. For full terms and conditions, visit www.methven.com.

METHVEN

Waipori

WASRCPWHAU

WAIPORI SATINJET RAIL SHOWER

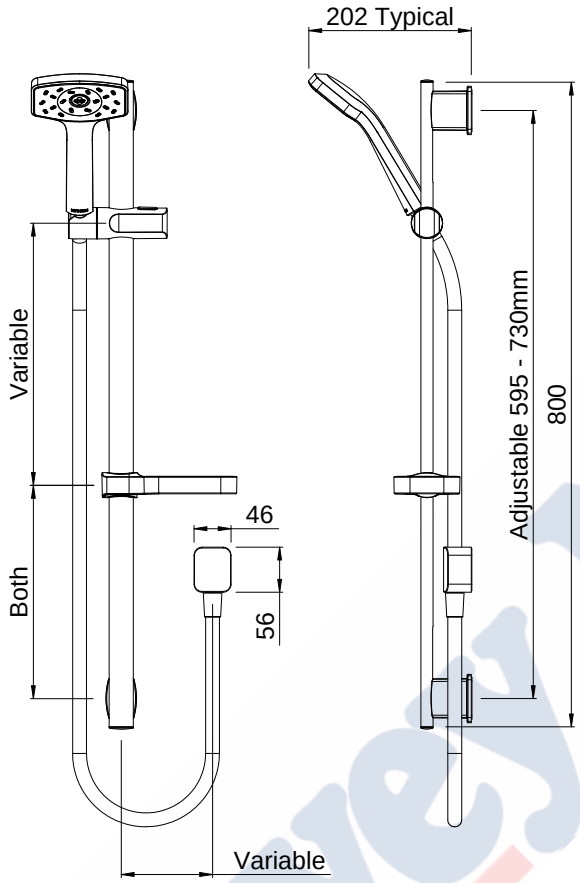

Satinjet®

Twist Free Hose

WATER RATING www.waterrating.gov.au 9.0 litres per minute Licence No. 0095

FINISH: Chrome/White

FUNCTIONS: Satinjet®
MOUNTING METHOD: Adjustable mounting points
SUPPLY: Mains Pressure
CONNECTIONS: 1/2" BSP Female
WORKING PRESSURES: 150 - 500 kpa
OPERATING TEMPERATURE: Recommended 50°C*

*Refer AS/NZS 3500

- Features the revolutionary Satinjet® spray design. Twin jets of water collide into thousands of tiny droplets to deliver voluminous shower coverage
- Single function handset featuring Satinjet® spray
- Easy-to-clean faceplate
- High quality 800mm oval rail with adjustable mounting point
- Height adjustable handset holder with push button slider
- Stylish chrome soap dish and wall elbow included
- Strong and durable, SatinLux hose
- Stylish white faceplate colour

THE METHVEN GUARANTEE. For total peace of mind, all domestic shower products include a Lifetime Replacement Guarantee. For commercial installations, Satinjet® showers carry a 15 Year Replacement Warranty. For full terms and conditions, visit www.methven.com.

METHVEN

LIFE TIME WARRANTY* *TERMS & CONDITIONS APPLY

DESIGNED & ENGINEERED NEW ZEALAND

Waipori

WAWOBCPWHAU

WAIPORI SATINJET HAND SHOWER

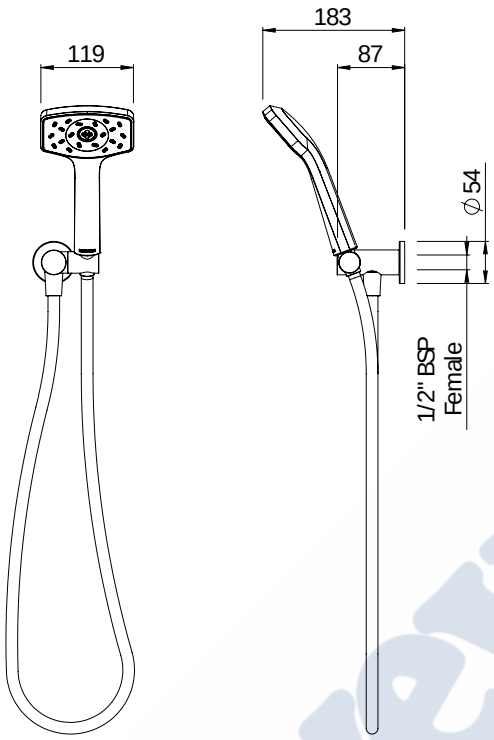

Satinjet®

Twist Free Hose

WATER RATING www.waterrating.gov.au 9.0 litres per minute In accordance with AS/NZS 6400 Licence No. 0095 Methven Australia Pty Ltd

FINISH: Chrome/White

FUNCTIONS: Satinjet®
MOUNTING METHOD: Screw-off, Screw-on
SUPPLY: Mains Pressure
CONNECTIONS: 1/2" BSP Female
WORKING PRESSURES: 150 - 500 kpa
OPERATING TEMPERATURE: Recommended 50°C*

*Refer AS/NZS 3500

- Features the revolutionary Satinjet® spray design. Twin jets of water collide into thousands of tiny droplets to deliver voluminous shower coverage
- Single function handset featuring Satinjet® spray
- Easy-to-clean faceplate
- Stylish round wall outlet bracket
- Strong and durable, SatinLux hose
- Easy retro-fit installation
- Stylish white faceplate colour

THE METHVEN GUARANTEE. For total peace of mind, all domestic shower products include a Lifetime Replacement Guarantee. For commercial installations, Satinjet® showers carry a 15 Year Replacement Warranty. For full terms and conditions, visit www.methven.com.